Tip and Material Grade Availability

Tip (Code)	G1	G2	G5
Multi-hole Torpedo Tip (X 16 TT)	✓	✓	✓
One-hole Torpedo Tip (X 16 IT)	✓	✓	✓
Open Tip (X 16 OT)	✓	×	×

To order a nozzle assembly:
Provide the Nozzle Code + Grade
(Order example: SXISN16065 G5 Radius=0)

To order a tip:
Provide the Tip Code + Grade
(Order example: X 16 IT G5)

Nozzle Dimensions

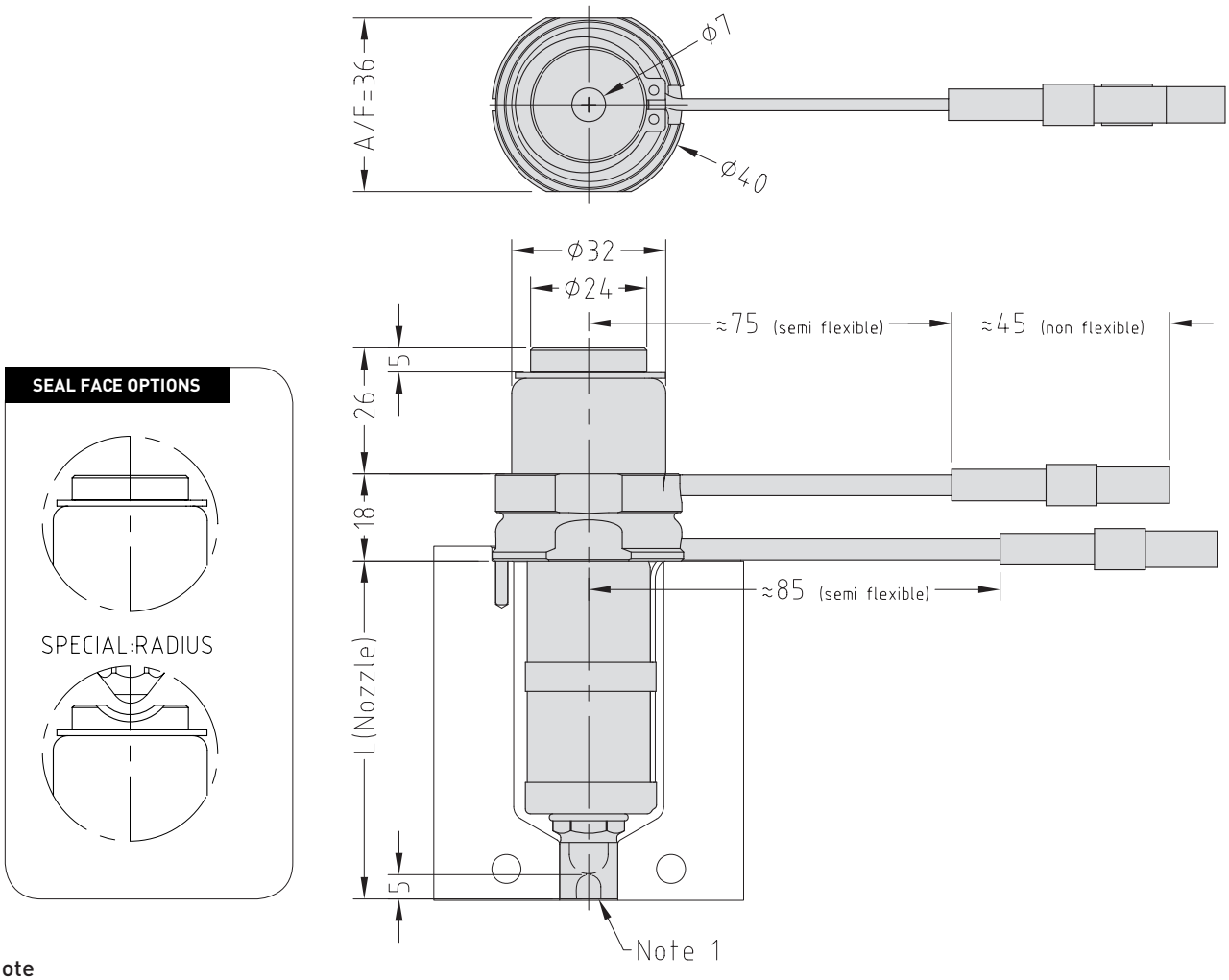

Note

1. Modify the contact area and the sprue nut to suit the application.

→ See Gate Modifications and Cooling sections in the Technical Specifications.

* Before restarting the nozzle remove any residue plastic from nozzle seal face to avoid damaging the nozzle.

© Copyright Mastip Technology Limited. Information subject to alteration. V1.03 **www.mastip.com**

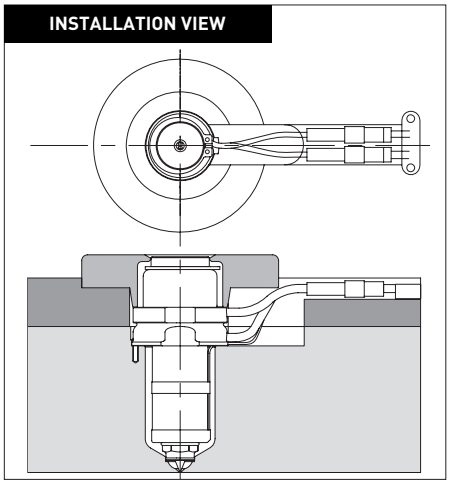

Multi-Hole Torpedo Nozzle Code	One-hole Torpedo Nozzle Code	Open Tip Nozzle Code	L	E@ΔT =200C	E@ΔT =250C
SXTSN16045	SXISN16045	SXOSN16045	50.2	0.13	0.17
SXTSN16055	SXISN16055	SXOSN16055	60.2	0.16	0.20
SXTSN16065	SXISN16065	SXOSN16065	70.2	0.19	0.23
SXTSN16075	SXISN16075	SXOSN16075	80.2	0.21	0.26
SXTSN16095	SXISN16095	SXOSN16095	100.2	0.26	0.33
SXTSN16115	SXISN16115	SXOSN16115	120.2	0.32	0.40
SXTSN16145	SXISN16145	SXOSN16145	150.2	0.40	0.50
SXTSN16175	SXISN16175	SXOSN16175	180.2	0.48	0.59

Nozzle Fitment and Gate Dimensions

E = L x 0.0000132 x (nozzle temp. ºC - mould temp. ºC)

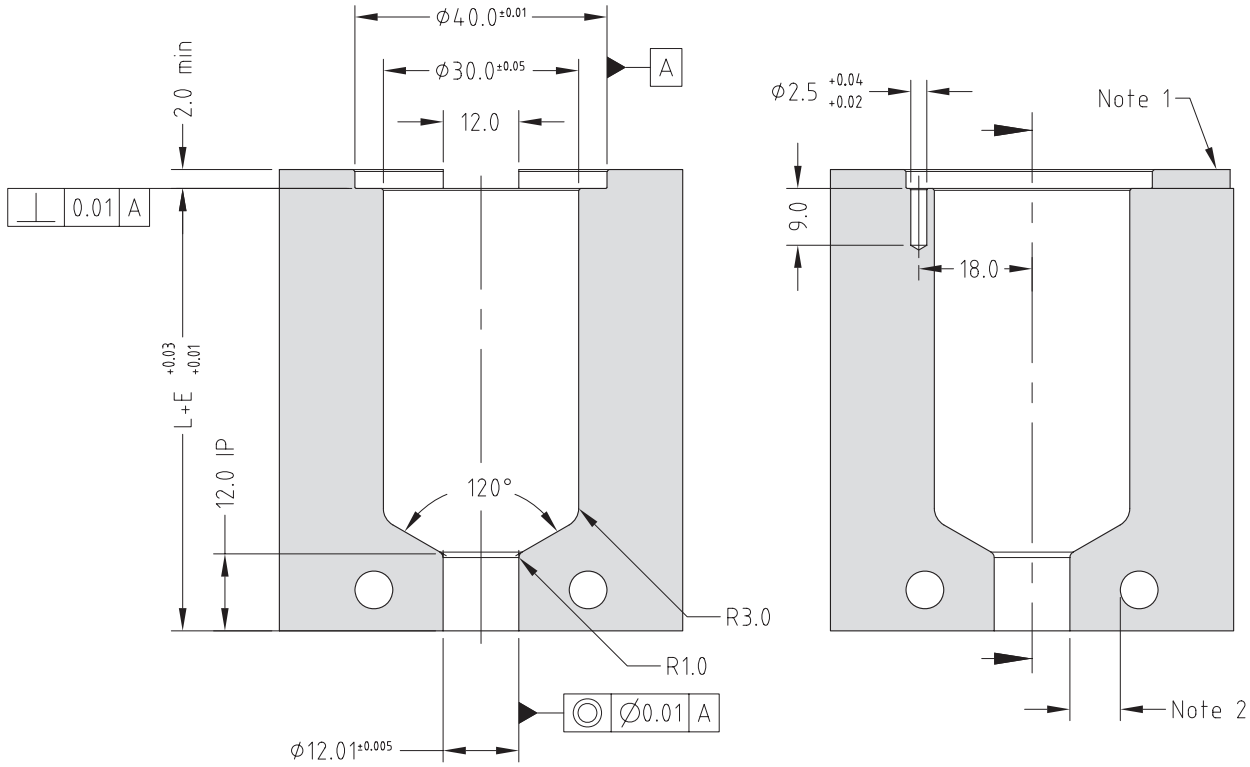

Note

1. Wire channel to suit mould.
2. Gate cooling is critical for correct operation and gate quality. → See Cooling section in Technical Specifications.
3. Modify gate diameter and land to suit the part. Supplied with Ø1.0 → See Gate Modifications in Technical Specifications.

* Minimum strength (σ_y) of nozzle plate 800MPa.

© Copyright Mastip Technology Limited. Information subject to alteration. V1.03 **www.mastip.com**