mastip™
hot runner solutions

FlowLoc™ Range
TXTG16

www.mastip.com

Tip and Nut Material Grade Availability

	Tip and Nut Grade			
Tip (Code)	G1/H1*	G2/H1*	G5/H1*	G5/H5
Multi-hole Torpedo Tip (X 16 TT)	✓	✓	✓	×
One-hole Torpedo Tip (X 16 IT)	✓	✓	✓	×
Open Tip (X 16 OT)	✓	×	✓	×

*Larger gate diameters are available as standard

Refer to the System Selection Guide for the nozzle assembly order code incorporating Tips and Nuts

Nozzle Dimensions

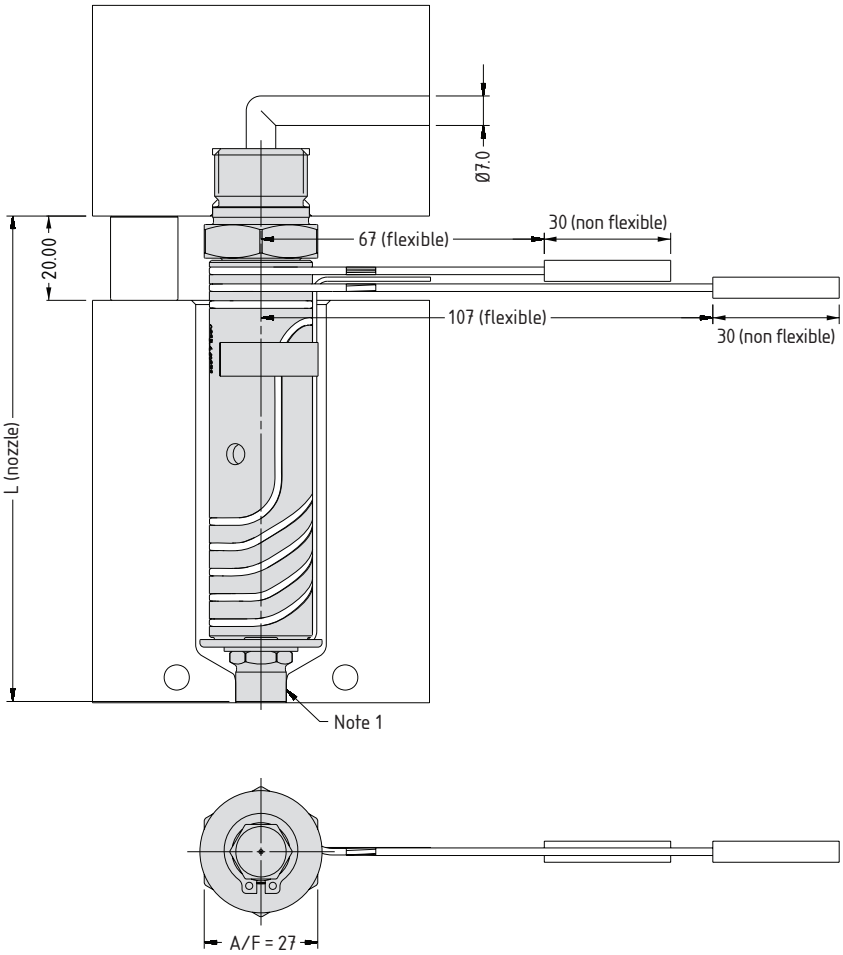

Note

1. Modify the contact area of the bush nut to suit the application.

→ Modify gate diameter and land to suit the part. → See Gate Modifications in Technical Specifications.

© Copyright Mastip Technology Limited. Information subject to alteration. V1.02 **www.mastip.com**

Multi-hole Torpedo Tip Nozzle Code	One-hole Torpedo Tip Nozzle Code	Open Tip Nozzle Code	L	PL	E@ΔT =200°C
TXTBE16095	TXIBE16095	TXOBE16095	95.2	75.2	0.22
TXTBE16115	TXIBE16115	TXOBE16115	115.2	95.2	0.28
TXTBE16130	TXIBE16130	TXOBE16130	130.2	110.2	0.32
TXTBE16145	TXIBE16145	TXOBE16145	145.2	125.2	0.36
TXTBE16175	TXIBE16175	TXOBE16175	175.2	155.2	0.44

Nozzle Fitment and Gate Dimensions

E = (PL + (20/2)) x 0.0000132 x (nozzle temp. °C - mould temp. °C)

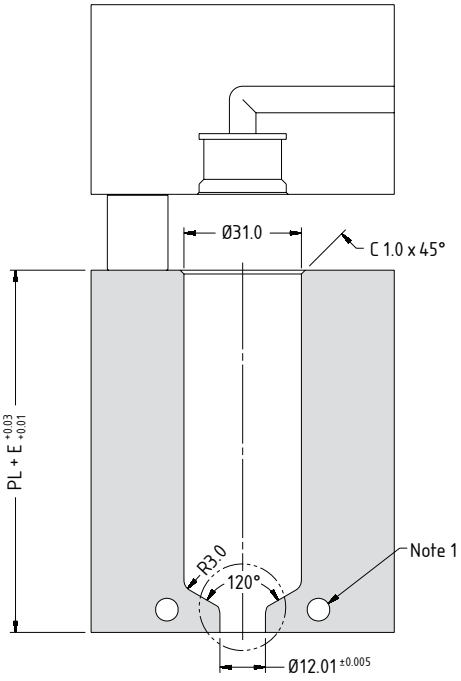

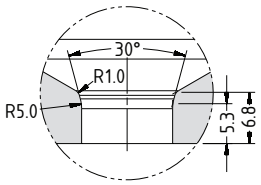

Note

1. Gate cooling is critical for correct operation and gate quality. → See Cooling section in Technical Specifications.

© Copyright Mastip Technology Limited. Information subject to alteration. V1.02 **www.mastip.com**

Tip and Nut Material Grade Availability

	Tip and Nut Grade			
Tip (Code)	G1/H1*	G2/H1*	G5/H1*	G5/H5
Multi-hole Torpedo Tip (X 16 TT)	✓	✓	✓	✓
One-hole Torpedo Tip (X 16 IT)	✓	✓	✓	✓
Open Tip (X 16 OT)	✓	×	✓	✓

*Larger gate diameters are available as standard

Refer to the System Selection Guide for the nozzle assembly order code incorporating Tips and Nuts

Nozzle Dimensions

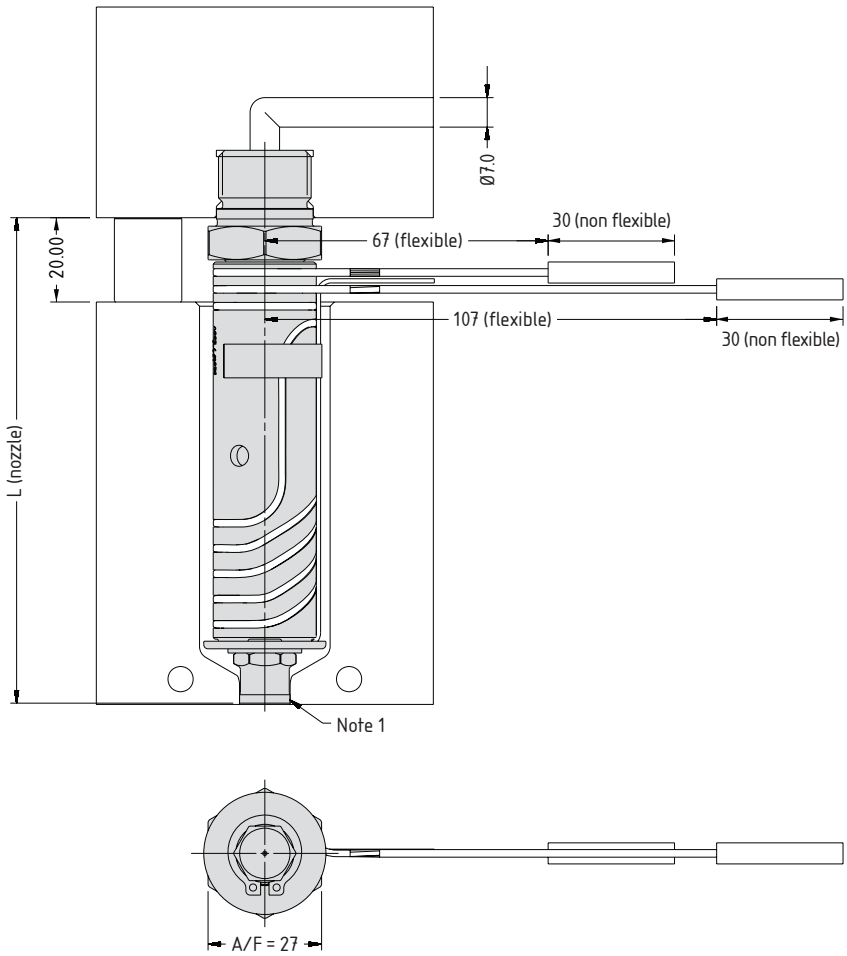

Note

1. Modify the contact area of the bush nut to suit the application.

→ Modify gate diameter and land to suit the part. → See Gate Modifications in Technical Specifications.

© Copyright Mastip Technology Limited. Information subject to alteration. V1.02 **www.mastip.com**

Multi-hole Torpedo Tip Nozzle Code	One-hole Torpedo Tip Nozzle Code	Open Tip Nozzle Code	L	PL	E@ΔT =200°C
TXTBN16095	TXIBN16095	TXOBN16095	95.2	75.2	0.22
TXTBN16115	TXIBN16115	TXOBN16115	115.2	95.2	0.28
TXTBN16130	TXIBN16130	TXOBN16130	130.2	110.2	0.32
TXTBN16145	TXIBN16145	TXOBN16145	145.2	125.2	0.36
TXTBN16175	TXIBN16175	TXOBN16175	175.2	155.2	0.44

Nozzle Fitment and Gate Dimensions

E = (PL + (20/2)) x 0.0000132 x (nozzle temp. °C - mould temp. °C)

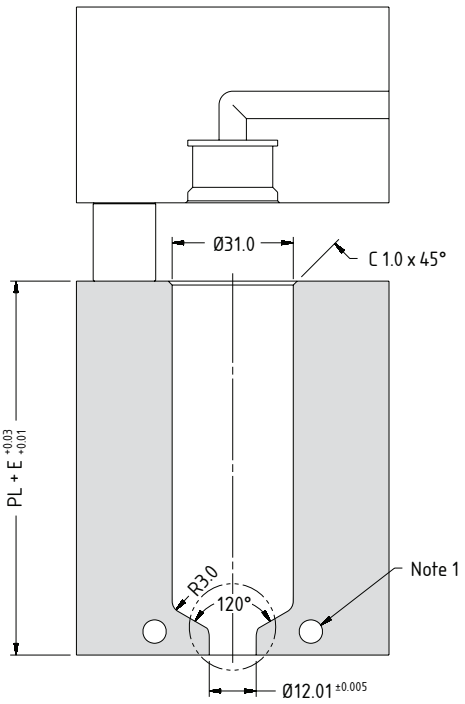

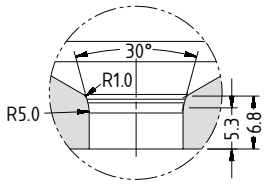

Note

1. Gate cooling is critical for correct operation and gate quality. → See Cooling section in Technical Specifications.

© Copyright Mastip Technology Limited. Information subject to alteration. V1.02 **www.mastip.com**

Tip and Nut Material Grade Availability

	Tip and Nut Grade			
Tip (Code)	G1/H1*	G2/H1*	G5/H1*	G5/H5
Multi-hole Torpedo Tip (X 16 TT)	✓	✓	✓	✓
One-hole Torpedo Tip (X 16 IT)	✓	✓	✓	✓
Open Tip (X 16 OT)	✓	×	✓	✓

*Larger gate diameters are available as standard

Refer to the System Selection Guide for the nozzle assembly order code incorporating Tips and Nuts

Nozzle Dimensions

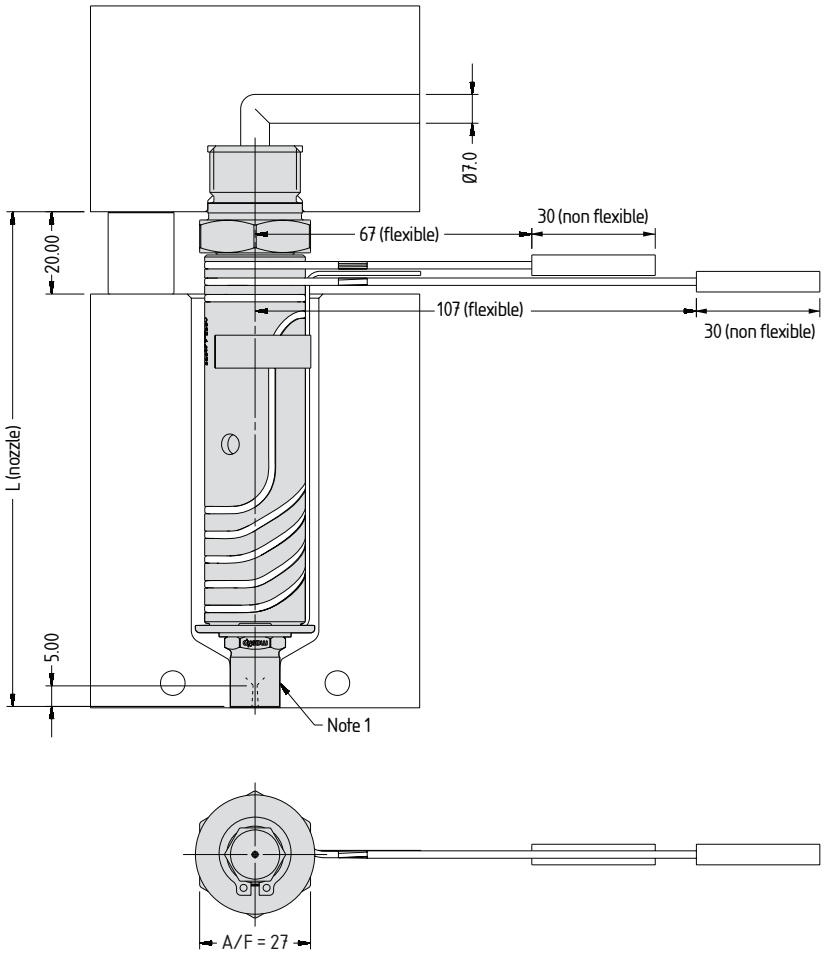

Note

1. Modify the contact area of the sprue nut to suit the application.

→ Modify gate diameter and land to suit the part. → See Gate Modifications in Technical Specifications.

© Copyright Mastip Technology Limited. Information subject to alteration. V1.02 **www.mastip.com**

Multi-hole Torpedo Tip Nozzle Code	One-hole Torpedo Tip Nozzle Code	Open Tip Nozzle Code	L	PL	E@ΔT =200°C
TXTSN16095	TXISN16095	TXOSN16095	100.2	80.2	0.24
TXTSN16115	TXISN16115	TXOSN16115	120.2	100.2	0.29
TXTSN16130	TXISN16130	TXOSN16130	135.2	115.2	0.33
TXTSN16145	TXISN16145	TXOSN16145	150.2	130.2	0.37
TXTSN16175	TXISN16175	TXOSN16175	180.2	160.2	0.45

Nozzle Fitment and Gate Dimensions

E = (PL + (20/2)) x 0.0000132 x (nozzle temp. °C - mould temp. °C)

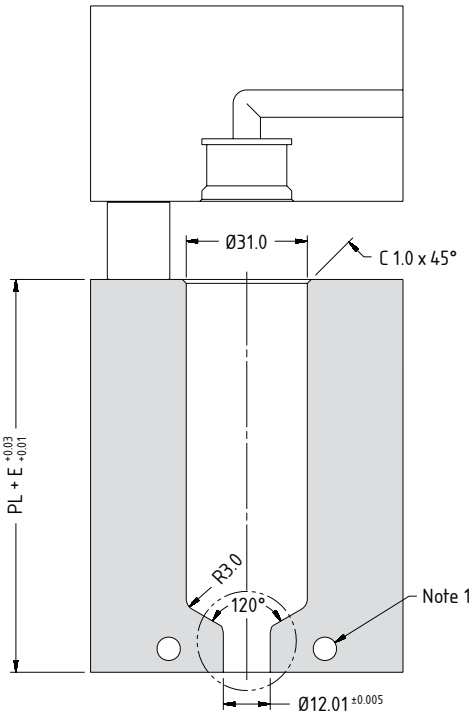

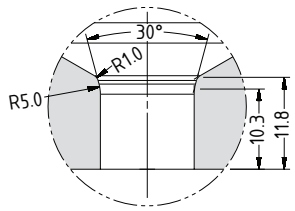

Note

1. Gate cooling is critical for correct operation and gate quality. → See Cooling section in Technical Specifications.

© Copyright Mastip Technology Limited. Information subject to alteration. V1.02 **www.mastip.com**

Tip Grade Availability

	Tip Grade		
Tip (Code)	G1	G2	G5
Multi-hole Torpedo Tip (X 16 TT)	✓	✓	✓
One-hole Torpedo Tip (X 16 IT)	✓	✓	✓
Open Tip (X 16 OT)	✓	✕	✓

Refer to the System Selection Guide for the nozzle assembly order code incorporating Tips and Nuts

Nozzle Dimensions

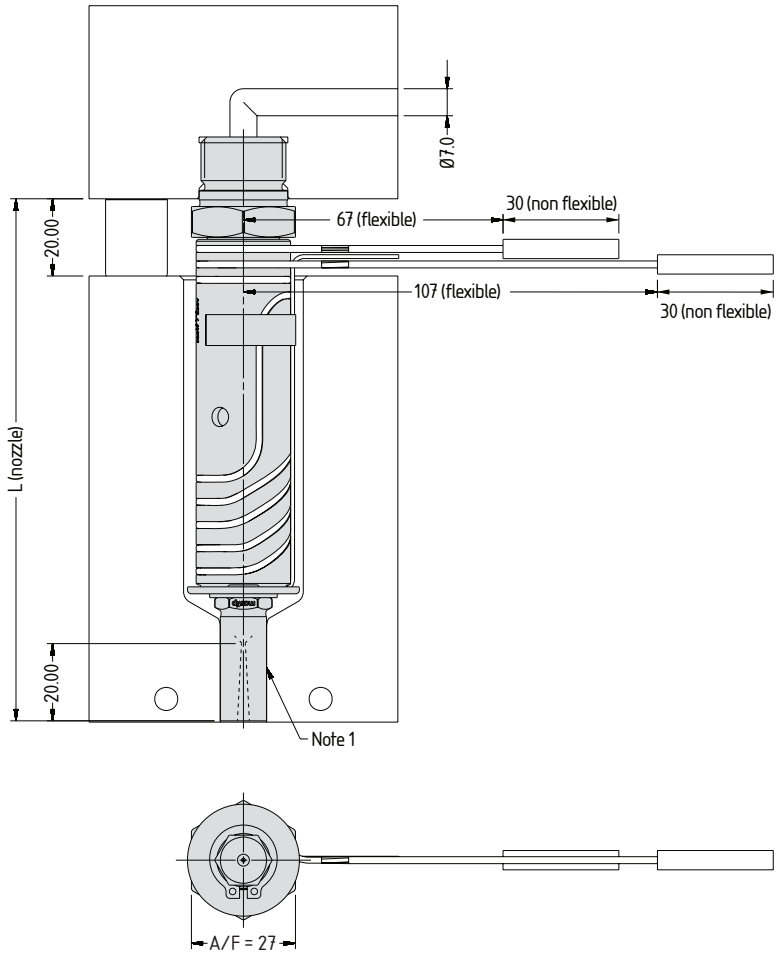

Note

1. Modify the contact area of the sprue nut to suit the application.

→ Modify gate diameter and land to suit the part. → See Gate Modifications in Technical Specifications.

© Copyright Mastip Technology Limited. Information subject to alteration. V1.02 **www.mastip.com**

Multi-hole Torpedo Tip Nozzle Code	One-hole Torpedo Tip Nozzle Code	Open Tip Nozzle Code	L	PL	E@ΔT =200°C
TXTSX16095	TXISX16095	TXOSX16095	115.2	95.2	0.28
TXTSX16115	TXISX16115	TXOSX16115	135.2	115.2	0.33
TXTSX16130	TXISX16130	TXOSX16130	150.2	130.2	0.37
TXTSX16145	TXISX16145	TXOSX16145	165.2	145.2	0.41
TXTSX16175	TXISX16175	TXOSX16175	195.2	175.2	0.49

Nozzle Fitment and Gate Dimensions

E = (PL + (20/2)) x 0.0000132 x (nozzle temp. °C - mould temp. °C)

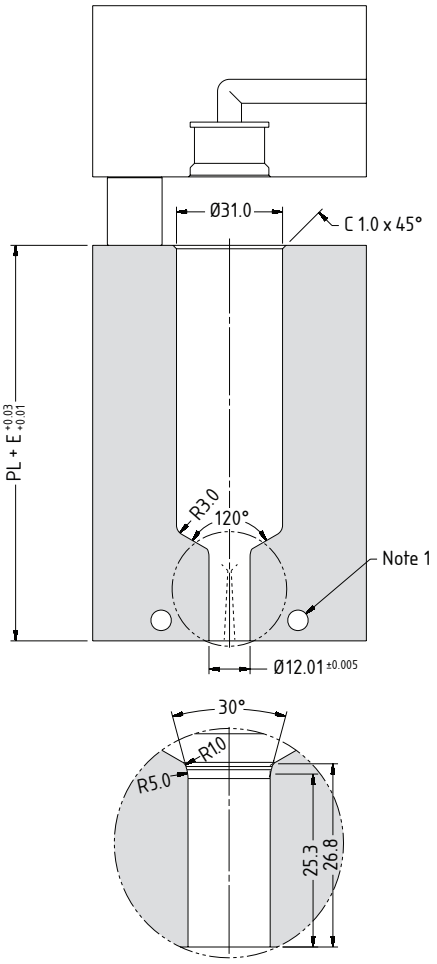

Note

1. Gate cooling is critical for correct operation and gate quality. → See Cooling section in Technical Specifications.

© Copyright Mastip Technology Limited. Information subject to alteration. V1.02 **www.mastip.com**

Tip Grade Availability

	Tip Grade		
Tip (Code)	G1	G2	G5
Multi-hole Torpedo Tip (X 16 TT)	✓	✓	✓
One-hole Torpedo Tip (X 16 IT)	✓	✓	✓
Open Tip (X 16 OT)	✓	✕	✓

Refer to the System Selection Guide for the nozzle assembly order code incorporating Tips and Nuts

Nozzle Dimensions

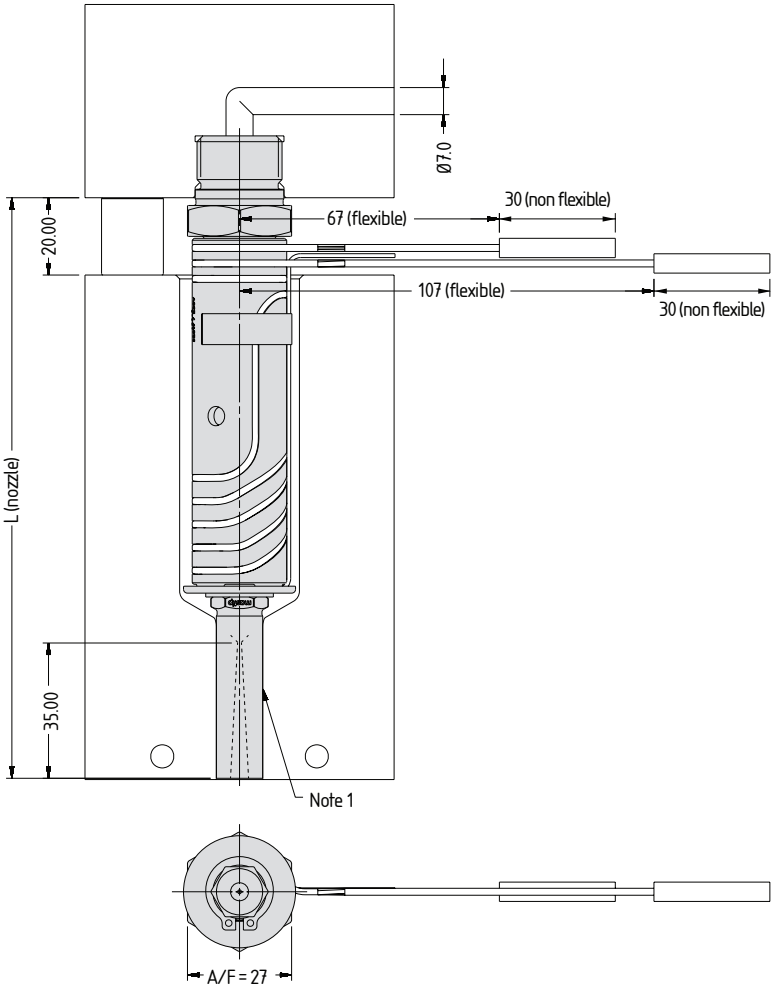

Note

1. Modify the contact area of the sprue nut to suit the application.

→ Modify gate diameter and land to suit the part. → See Gate Modifications in Technical Specifications.

© Copyright Mastip Technology Limited. Information subject to alteration. V1.02 **www.mastip.com**

Multi-hole Torpedo Tip Nozzle Code	One-hole Torpedo Tip Nozzle Code	Open Tip Nozzle Code	L	PL	E@ΔT =200°C
TXTSL16095	TXISL16095	TXOSL16095	130.2	110.2	0.32
TXTSL16115	TXISL16115	TXOSL16115	150.2	130.2	0.37
TXTSL16130	TXISL16130	TXOSL16130	165.2	145.2	0.41
TXTSL16145	TXISL16145	TXOSL16145	180.2	160.2	0.45
TXTSL16175	TXISL16175	TXOSL16175	210.2	190.2	0.53

Nozzle Fitment and Gate Dimensions

E = (PL + (20/2)) x 0.0000132 x (nozzle temp. °C - mould temp. °C)

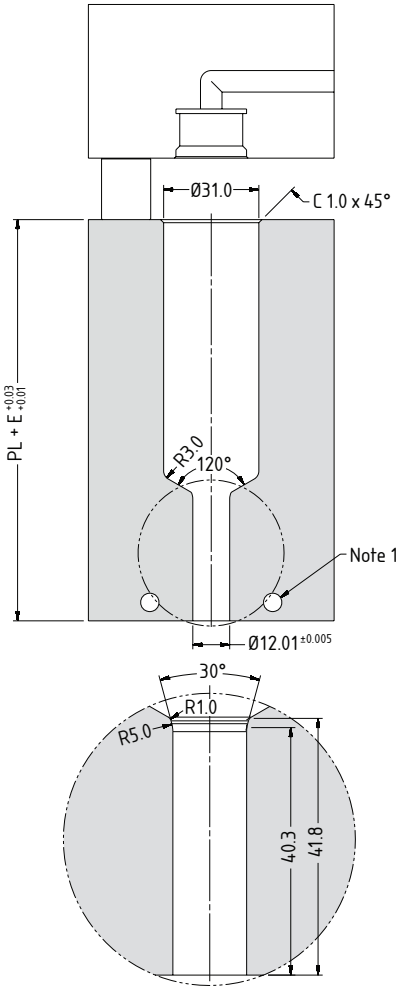

Note

1. Gate cooling is critical for correct operation and gate quality. → See Cooling section in Technical Specifications.

© Copyright Mastip Technology Limited. Information subject to alteration. V1.02 **www.mastip.com**

Nozzle Dimensions

Style	A	B
P7	26	Contact Mastip
P4	29	
N3	36	

Refer to the System Selection Guide for the nozzle assembly order code incorporating Tips and Nuts

Nozzle Dimensions

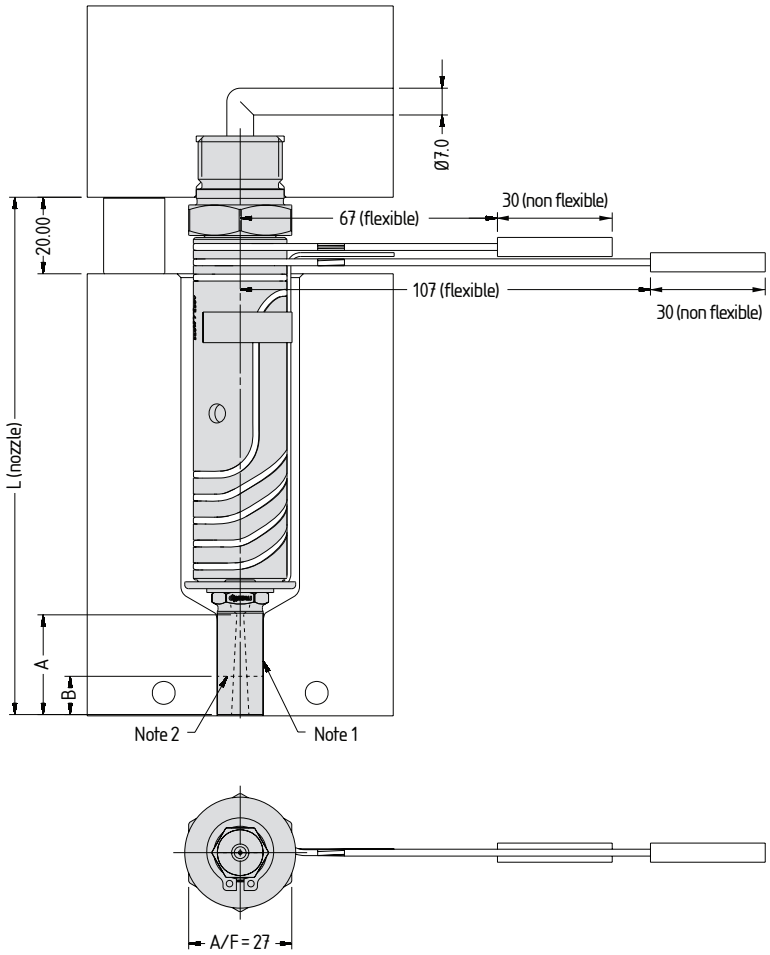

Note

1. Modify the contact area of the YCN nut to suit the application.
2. Contact Mastip to reduce the length (B) of the YCN nut.

→ Modify gate diameter and land to suit the part. → See Gate Modifications in Technical Specifications.

© Copyright Mastip Technology Limited. Information subject to alteration. V1.02 **www.mastip.com**

P7 Gate Profile Nozzle Code	P4 Gate Profile Nozzle Code	N3 Gate Profile Nozzle Code	L	PL	E@ΔT =200°C
TXYCN16095	TXYCN16095	TXYCN16095	115.2	95.2	0.28
TXYCN16115	TXYCN16115	TXYCN16115	135.2	115.2	0.33
TXYCN16130	TXYCN16130	TXYCN16130	150.2	130.2	0.37
TXYCN16145	TXYCN16145	TXYCN16145	165.2	145.2	0.41
TXYCN16175	TXYCN16175	TXYCN16175	195.2	175.2	0.49

Nozzle Fitment and Gate Dimensions

E = (PL + (20/2)) x 0.0000132 x (nozzle temp. °C - mould temp. °C)

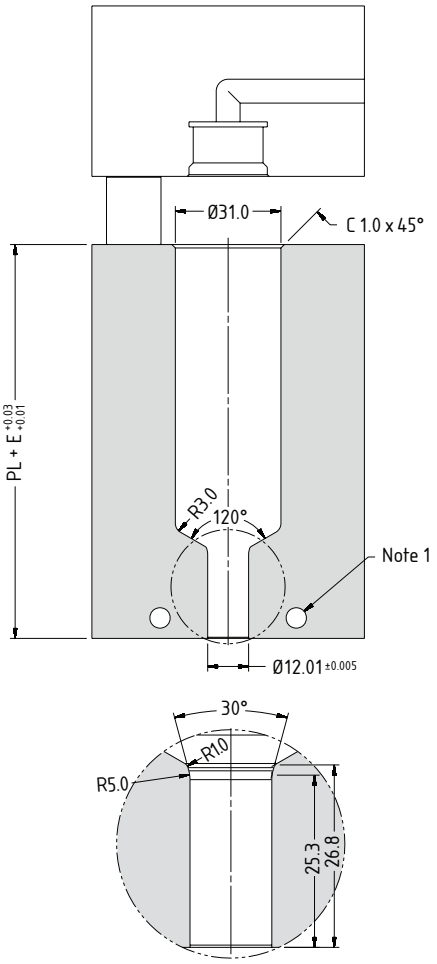

Note

1. Gate cooling is critical for correct operation and gate quality. → See Cooling section in Technical Specifications.

© Copyright Mastip Technology Limited. Information subject to alteration. V1.02 **www.mastip.com**

Mastip Head Office New Zealand

Physical Address
558 Rosebank Road, Avondale
Auckland 1026, New Zealand

Postal Address
PO Box 90651, Victoria St West
Auckland 1142, New Zealand

Phone: +64 9 970 2100
Email: mastip@mastip.com

Mastip Regional Office Europe
Phone: +33 0 809 400 076
Email: europe@mastip.com

Mastip Regional Office North America
Phone: +1 262 644 9400
Email: northamerica@mastip.com

Mastip Regional Office China
Email: china@mastip.com

For a full list of Distributors,
please visit www.mastip.com

© Copyright Mastip Technology Limited. Information subject to alteration.

mastip™
hot runner solutions

FlowLoc™ Range
TXTG19

www.mastip.com

Tip and Nut Material Grade Availability

	Tip and Nut Grade			
Tip (Code)	G1/H1*	G2/H1*	G5/H1*	G5/H5
Multi-hole Torpedo Tip (X 19 TT)	✓	✓	✓	×
One-hole Torpedo Tip (X 19 IT)	✓	✓	✓	×
Open Tip (X 19 OT)	✓	×	✓	×

*Larger gate diameters are available as standard

Refer to the System Selection Guide for the nozzle assembly order code incorporating Tips and Nuts

Nozzle Dimensions

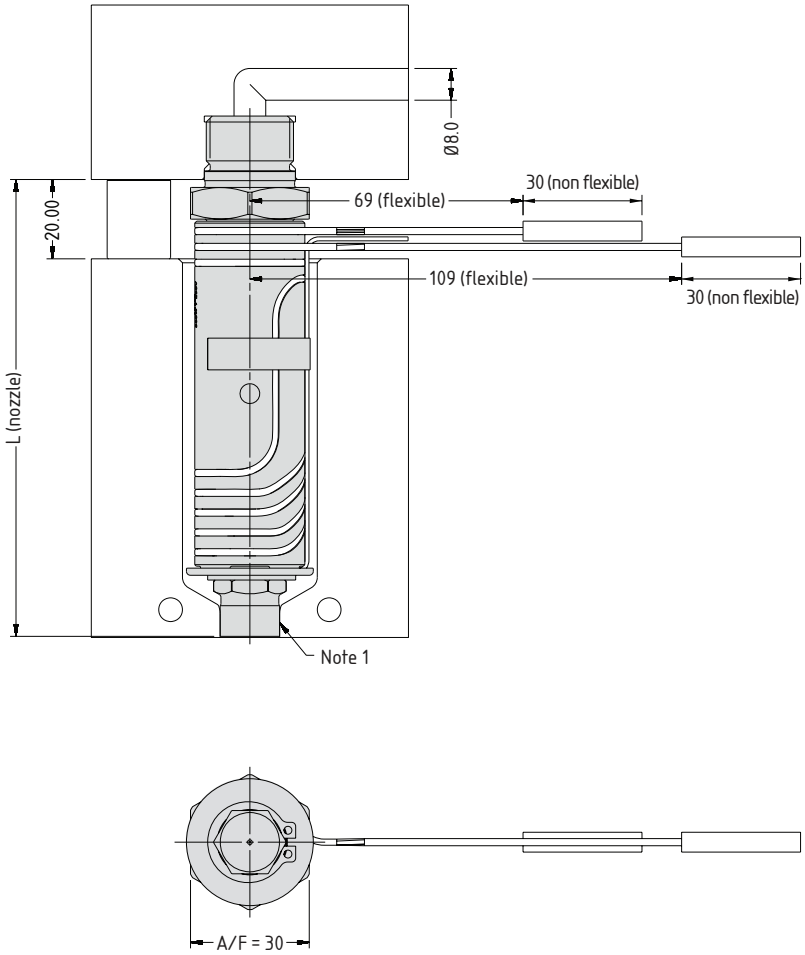

Note

1. Modify the contact area of the bush nut to suit the application.

→ Modify gate diameter and land to suit the part. → See Gate Modifications in Technical Specifications.

© Copyright Mastip Technology Limited. Information subject to alteration. V1.02 **www.mastip.com**

Multi-hole Torpedo Tip Nozzle Code	One-hole Torpedo Tip Nozzle Code	Open Tip Nozzle Code	L	PL	E@ΔT =200°C
TXTBE19095	TXIBE19095	TXOBE19095	95.2	75.2	0.22
TXTBE19115	TXIBE19115	TXOBE19115	115.2	95.2	0.28
TXTBE19130	TXIBE19130	TXOBE19130	130.2	110.2	0.32
TXTBE19145	TXIBE19145	TXOBE19145	145.2	125.2	0.36
TXTBE19175	TXIBE19175	TXOBE19175	175.2	155.2	0.44

Nozzle Fitment and Gate Dimensions

E = (PL + (20/2)) x 0.0000132 x (nozzle temp. °C - mould temp. °C)

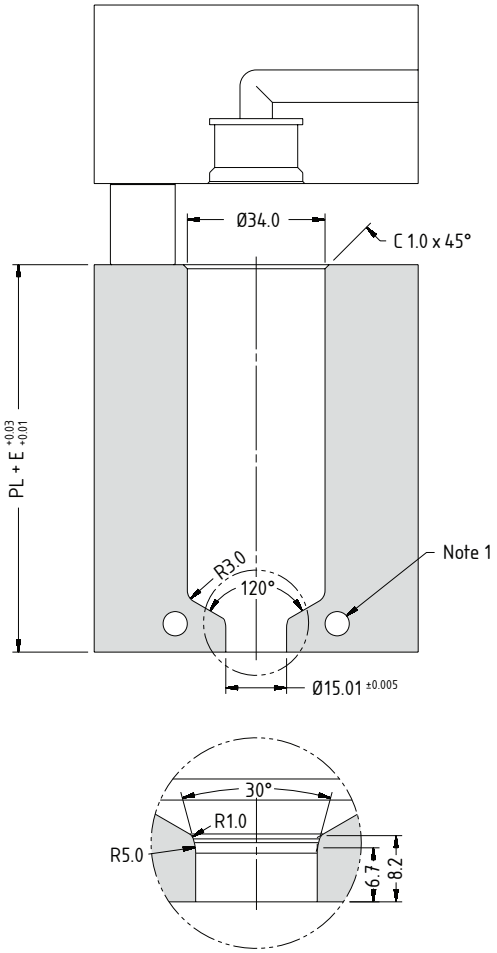

Note

1. Gate cooling is critical for correct operation and gate quality. → See Cooling section in Technical Specifications.

© Copyright Mastip Technology Limited. Information subject to alteration. V1.02 **www.mastip.com**

Tip and Nut Material Grade Availability

	Tip and Nut Grade			
Tip (Code)	G1/H1*	G2/H1*	G5/H1*	G5/H5
Multi-hole Torpedo Tip (X 19 TT)	✓	✓	✓	✓
One-hole Torpedo Tip (X 19 IT)	✓	✓	✓	✓
Open Tip (X 19 OT)	✓	×	✓	✓

*Larger gate diameters are available as standard

Refer to the System Selection Guide for the nozzle assembly order code incorporating Tips and Nuts

Nozzle Dimensions

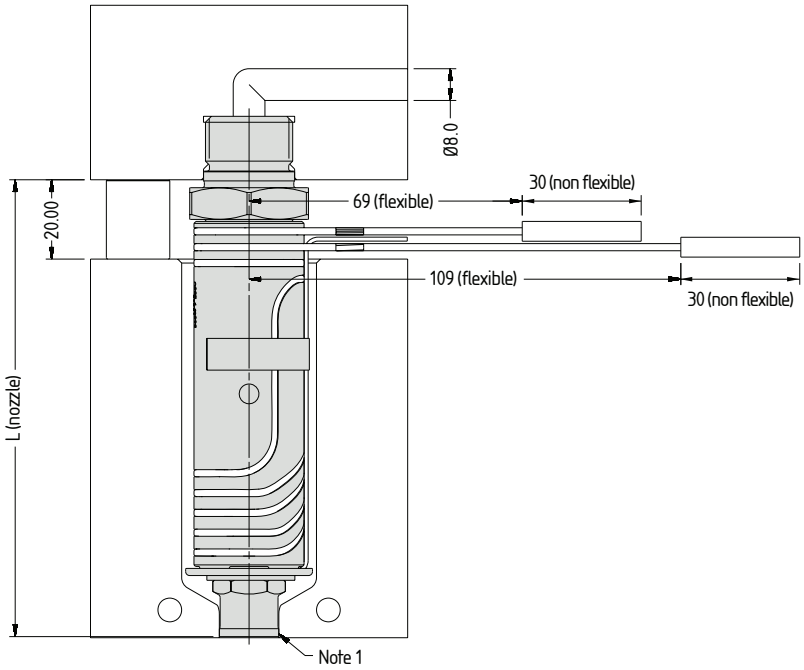

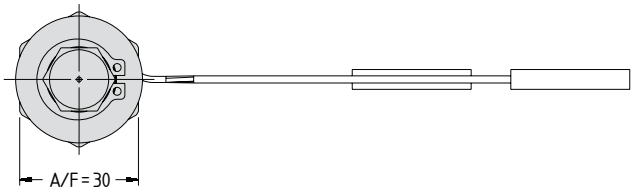

Note

1. Modify the contact area of the bush nut to suit the application.

→ Modify gate diameter and land to suit the part. → See Gate Modifications in Technical Specifications.

© Copyright Mastip Technology Limited. Information subject to alteration. V1.02 **www.mastip.com**

Multi-hole Torpedo Tip Nozzle Code	One-hole Torpedo Tip Nozzle Code	Open Tip Nozzle Code	L	PL	E@ΔT =200°C
TXTBN19095	TXIBN19095	TXOBN19095	95.2	75.2	0.22
TXTBN19115	TXIBN19115	TXOBN19115	115.2	95.2	0.28
TXTBN19130	TXIBN19130	TXOBN19130	130.2	110.2	0.32
TXTBN19145	TXIBN19145	TXOBN19145	145.2	125.2	0.36
TXTBN19175	TXIBN19175	TXOBN19175	175.2	155.2	0.44

Nozzle Fitment and Gate Dimensions

E = (PL + (20/2)) x 0.0000132 x (nozzle temp. °C - mould temp. °C)

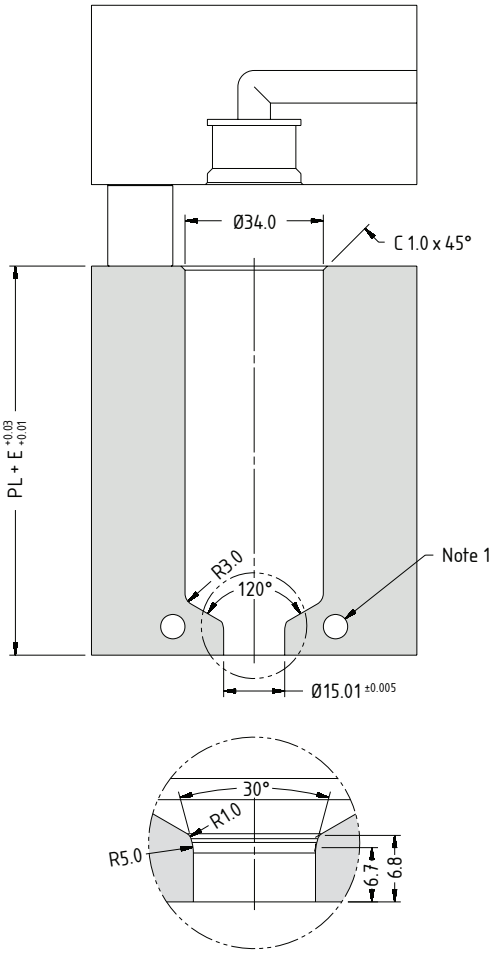

Note

1. Gate cooling is critical for correct operation and gate quality. → See Cooling section in Technical Specifications.

© Copyright Mastip Technology Limited. Information subject to alteration. V1.02 **www.mastip.com**

Tip and Nut Material Grade Availability

	Tip and Nut Grade			
Tip (Code)	G1/H1*	G2/H1*	G5/H1*	G5/H5
Multi-hole Torpedo Tip (X 19 TT)	✓	✓	✓	✓
One-hole Torpedo Tip (X 19 IT)	✓	✓	✓	✓
Open Tip (X 19 OT)	✓	×	✓	✓

*Larger gate diameters are available as standard

Refer to the System Selection Guide for the nozzle assembly order code incorporating Tips and Nuts

Nozzle Dimensions

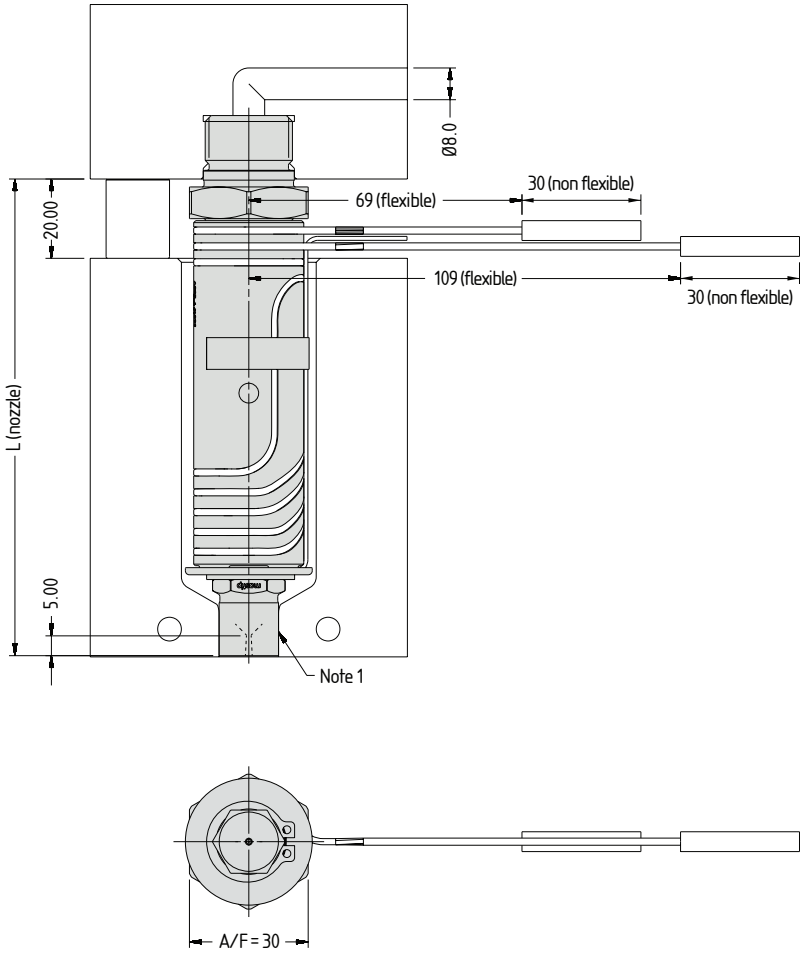

Note

1. Modify the contact area of the sprue nut to suit the application.

→ Modify gate diameter and land to suit the part. → See Gate Modifications in Technical Specifications.

© Copyright Mastip Technology Limited. Information subject to alteration. V1.02 **www.mastip.com**

Multi-hole Torpedo Tip Nozzle Code	One-hole Torpedo Tip Nozzle Code	Open Tip Nozzle Code	L	PL	E@ΔT =200°C
TXTSN19095	TXISN19095	TXOSN19095	100.2	80.2	0.24
TXTSN19115	TXISN19115	TXOSN19115	120.2	100.2	0.29
TXTSN19130	TXISN19130	TXOSN19130	135.2	115.2	0.33
TXTSN19145	TXISN19145	TXOSN19145	150.2	130.2	0.37
TXTSN19175	TXISN19175	TXOSN19175	180.2	160.2	0.45

Nozzle Fitment and Gate Dimensions

E = (PL + (20/2)) x 0.0000132 x (nozzle temp. °C - mould temp. °C)

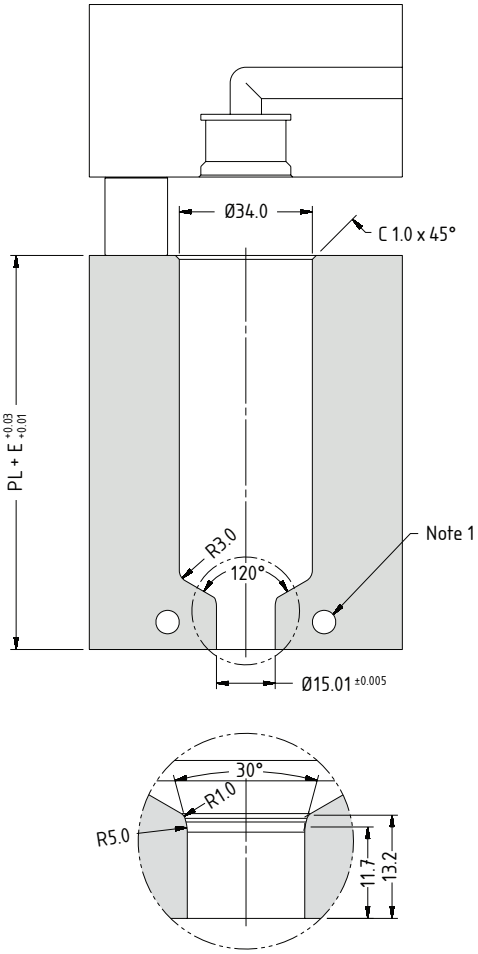

Note

1. Gate cooling is critical for correct operation and gate quality. → See Cooling section in Technical Specifications.

© Copyright Mastip Technology Limited. Information subject to alteration. V1.02 **www.mastip.com**

Tip Grade Availability

	Tip Grade		
Tip (Code)	G1	G2	G5
Multi-hole Torpedo Tip (X 19 TT)	✓	✓	✓
One-hole Torpedo Tip (X 19 IT)	✓	✓	✓
Open Tip (X 19 OT)	✓	×	✓

Refer to the System Selection Guide for the nozzle assembly order code incorporating Tips and Nuts

Nozzle Dimensions

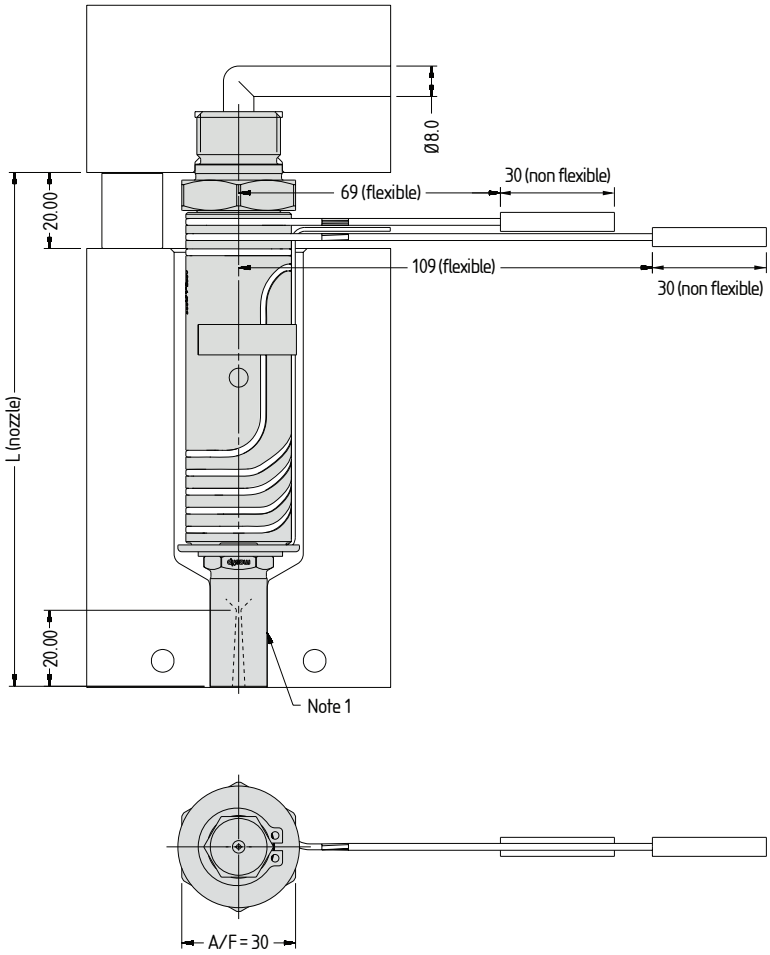

Note

1. Modify the contact area of the sprue nut to suit the application.

→ Modify gate diameter and land to suit the part. → See Gate Modifications in Technical Specifications.

© Copyright Mastip Technology Limited. Information subject to alteration. V1.02 **www.mastip.com**

Multi-hole Torpedo Tip Nozzle Code	One-hole Torpedo Tip Nozzle Code	Open Tip Nozzle Code	L	PL	E@ΔT =200°C
TXTSX19095	TXISX19095	TXOSX19095	115.2	95.2	0.28
TXTSX19115	TXISX19115	TXOSX19115	135.2	115.2	0.33
TXTSX19130	TXISX19130	TXOSX19130	150.2	130.2	0.37
TXTSX19145	TXISX19145	TXOSX19145	165.2	145.2	0.41
TXTSX19175	TXISX19175	TXOSX19175	195.2	175.2	0.49

Nozzle Fitment and Gate Dimensions

E = (PL + (20/2)) x 0.0000132 x (nozzle temp. °C - mould temp. °C)

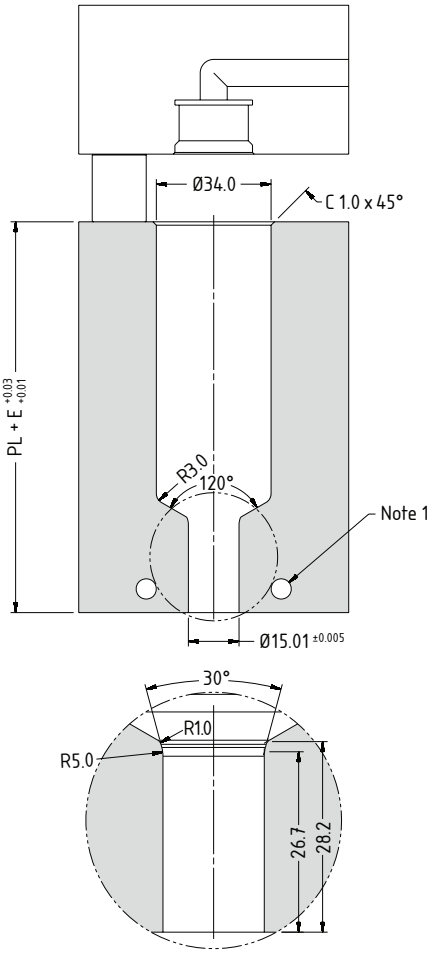

Note

1. Gate cooling is critical for correct operation and gate quality. → See Cooling section in Technical Specifications.

© Copyright Mastip Technology Limited. Information subject to alteration. V1.02 **www.mastip.com**

Tip Grade Availability

	Tip Grade		
Tip (Code)	G1	G2	G5
Multi-hole Torpedo Tip (X 19 TT)	✓	✓	✓
One-hole Torpedo Tip (X 19 IT)	✓	✓	✓
Open Tip (X 19 OT)	✓	✕	✓

Refer to the System Selection Guide for the nozzle assembly order code incorporating Tips and Nuts

Nozzle Dimensions

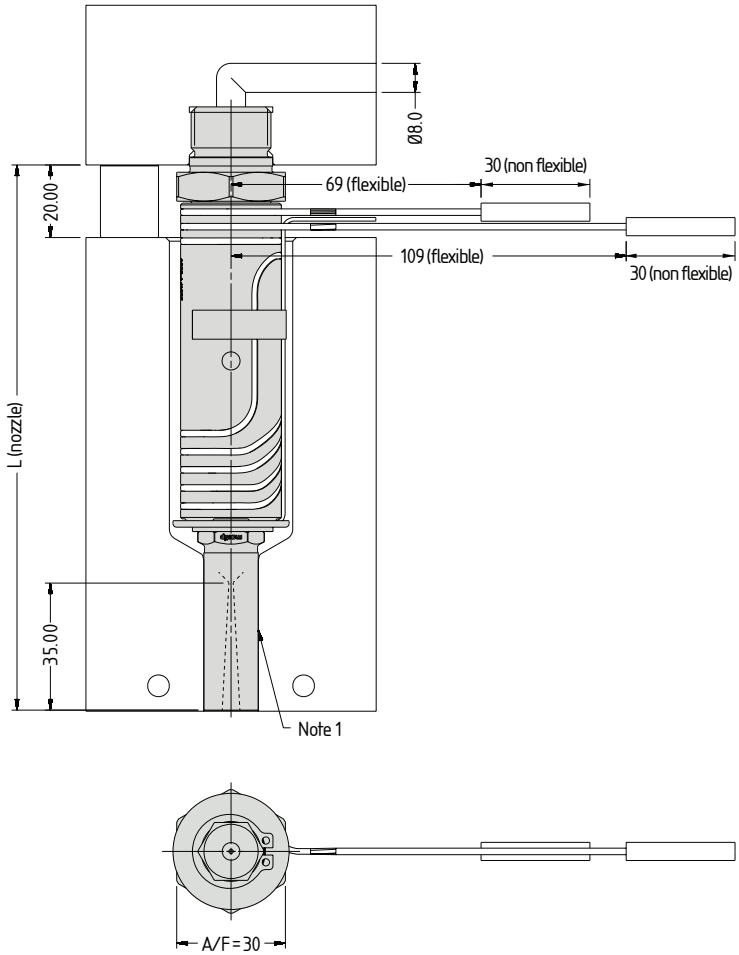

Note

1. Modify the contact area of the sprue nut to suit the application.

→ Modify gate diameter and land to suit the part. → See Gate Modifications in Technical Specifications.

© Copyright Mastip Technology Limited. Information subject to alteration. V1.02 **www.mastip.com**

Multi-hole Torpedo Tip Nozzle Code	One-hole Torpedo Tip Nozzle Code	Open Tip Nozzle Code	L	PL	E@ΔT =200°C
TXTSL19095	TXISL19095	TXOSL19095	130.2	110.2	0.32
TXTSL19115	TXISL19115	TXOSL19115	150.2	130.2	0.37
TXTSL19130	TXISL19130	TXOSL19130	165.2	145.2	0.41
TXTSL19145	TXISL19145	TXOSL19145	180.2	160.2	0.45
TXTSL19175	TXISL19175	TXOSL19175	210.2	190.2	0.53

Nozzle Fitment and Gate Dimensions

E = (PL + (20/2)) x 0.0000132 x (nozzle temp. °C - mould temp. °C)

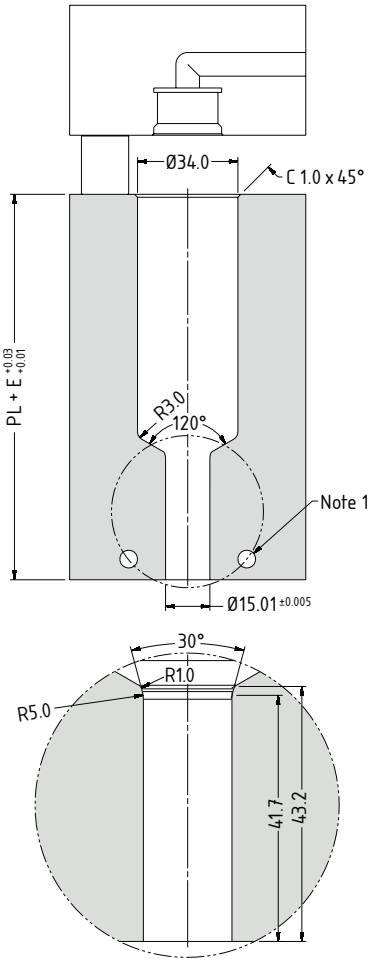

Note

1. Gate cooling is critical for correct operation and gate quality. → See Cooling section in Technical Specifications.

© Copyright Mastip Technology Limited. Information subject to alteration. V1.02 **www.mastip.com**

Nozzle Dimensions

Style	A	B
P7	29	Contact Mastip
P4	32	
N3	39	

Refer to the System Selection Guide for the nozzle assembly order code incorporating Tips and Nuts

Nozzle Dimensions

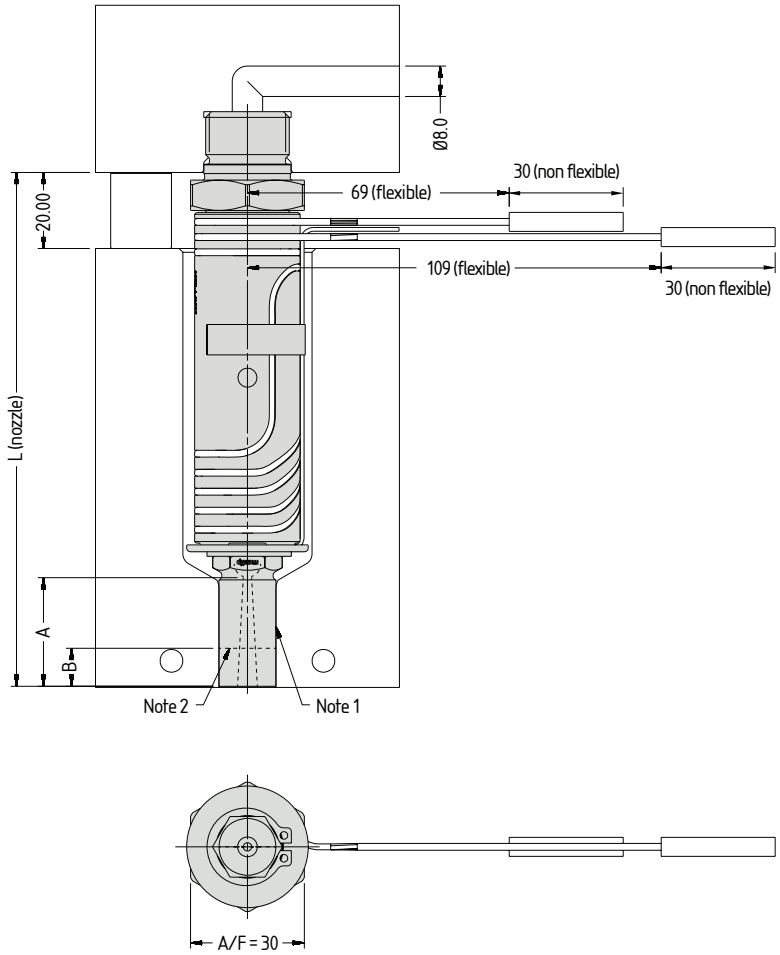

Note

1. Modify the contact area of the YCN nut to suit the application.
2. Contact Mastip to reduce the length (B) of the YCN nut.

→ Modify gate diameter and land to suit the part. → See Gate Modifications in Technical Specifications.

© Copyright Mastip Technology Limited. Information subject to alteration. V1.02 **www.mastip.com**

P7 Gate Profile Nozzle Code	P4 Gate Profile Nozzle Code	N3 Gate Profile Nozzle Code	L	PL	E@ΔT =200°C
TXYCN19095	TXYCN19095	TXYCN19095	115.2	95.2	0.28
TXYCN19115	TXYCN19115	TXYCN19115	135.2	115.2	0.33
TXYCN19130	TXYCN19130	TXYCN19130	165.2	130.2	0.37
TXYCN19145	TXYCN19145	TXYCN19145	165.2	145.2	0.41
TXYCN19175	TXYCN19175	TXYCN19175	195.2	175.2	0.49

Nozzle Fitment and Gate Dimensions

E = (PL + (20/2)) x 0.0000132 x (nozzle temp. °C - mould temp. °C)

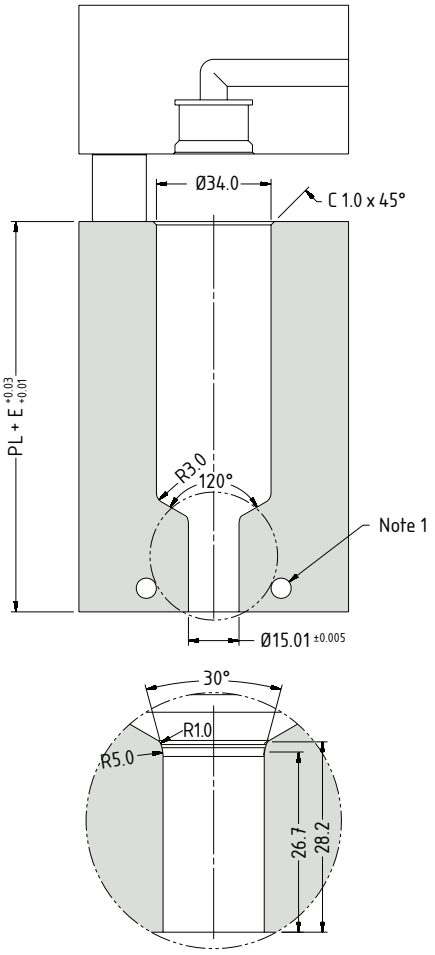

Note

1. Gate cooling is critical for correct operation and gate quality. → See Cooling section in Technical Specifications.

© Copyright Mastip Technology Limited. Information subject to alteration. V1.02 **www.mastip.com**

Mastip Head Office New Zealand

Physical Address
558 Rosebank Road, Avondale
Auckland 1026, New Zealand

Postal Address
PO Box 90651, Victoria St West
Auckland 1142, New Zealand

Phone: +64 9 970 2100
Email: mastip@mastip.com

Mastip Regional Office Europe
Phone: +33 0 809 400 076
Email: europe@mastip.com

Mastip Regional Office North America
Phone: +1 262 644 9400
Email: northamerica@mastip.com

Mastip Regional Office China
Email: china@mastip.com

For a full list of Distributors,
please visit www.mastip.com

© Copyright Mastip Technology Limited. Information subject to alteration.

mastip™
hot runner solutions

FlowLoc™ Range
TXTG27

www.mastip.com

Tip and Nut Material Grade Availability

	Tip and Nut Grade			
Tip (Code)	G1/H1*	G2/H1*	G5/H1*	G5/H5
Multi-hole Torpedo Tip (X 27 TT)	✓	✓	✓	×
One-hole Torpedo Tip (X 27 IT)	✓	✓	✓	×
Open Tip (X 27 OT)	✓	×	✓	×

*Larger gate diameters are available as standard

Refer to the System Selection Guide for the nozzle assembly order code incorporating Tips and Nuts

Nozzle Dimensions

TXBE27095 - TXBE27175

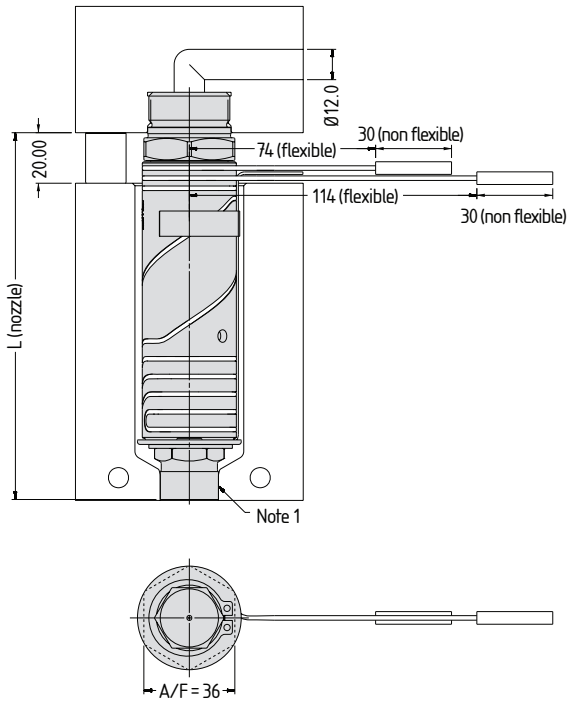

TXBE27225 - TXBE27275

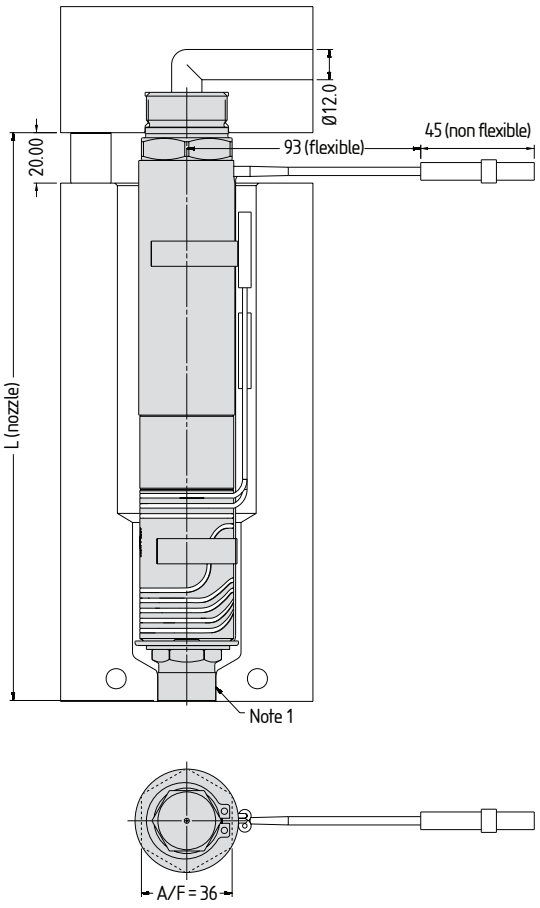

Note

1. Modify the contact area of the bush nut to suit the application.

→ Modify gate diameter and land to suit the part. → See Gate Modifications in Technical Specifications.

© Copyright Mastip Technology Limited. Information subject to alteration. V1.02 **www.mastip.com**

Multi-hole Torpedo Tip Nozzle Code	One-hole Torpedo Tip Nozzle Code	Open Tip Nozzle Code	L	PL	E@ΔT =200°C
TXTBE27095	TXIBE27095	TXOBE27095	95.2	75.2	0.22
TXTBE27115	TXIBE27115	TXOBE27115	115.2	95.2	0.28
TXTBE27130	TXIBE27130	TXOBE27130	130.2	110.2	0.32
TXTBE27145	TXIBE27145	TXOBE27145	145.2	125.2	0.36
TXTBE27175	TXIBE27175	TXOBE27175	175.2	155.2	0.44
TXTBE27225	TXIBE27225	TXOBE27225	225.2	205.2	0.57
TXTBE27275	TXIBE27275	TXOBE27275	275.2	255.2	0.70

Nozzle Fitment and Gate Dimensions

E = (PL + (20/2)) x 0.0000132 x (nozzle temp. °C - mould temp. °C)

TXBE27095 - TXBE2175

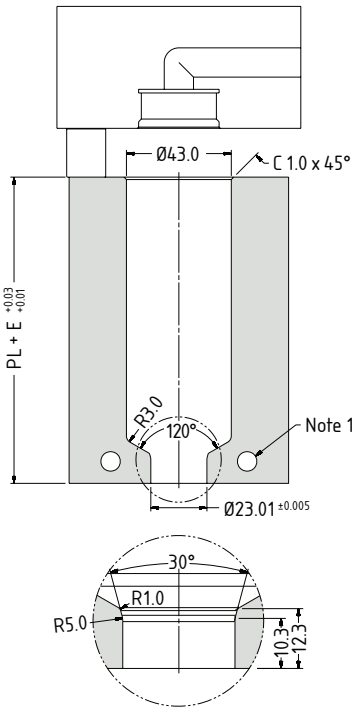

TXBE27225 - TXBE27275

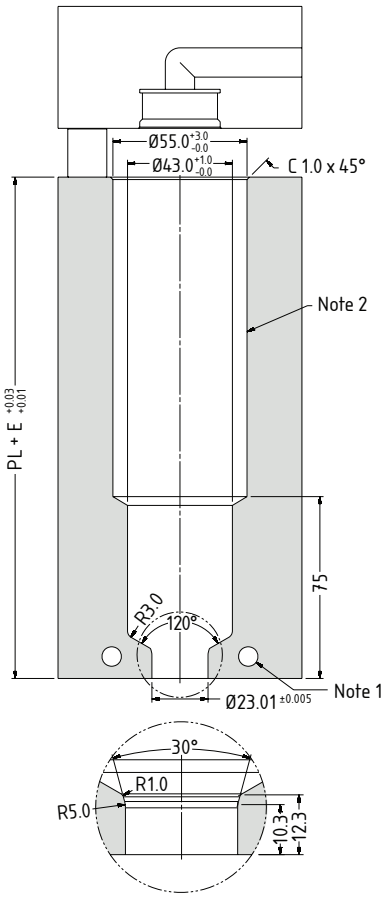

Note

1. Gate cooling is critical for correct operation and gate quality. → See Cooling section in Technical Specifications.
2. TX27225 - TX27275 uses two heaters. Larger pocket is to accomodate the front heater wiring.

© Copyright Mastip Technology Limited. Information subject to alteration. V1.02 **www.mastip.com**

Tip and Nut Material Grade Availability

	Tip and Nut Grade			
Tip (Code)	G1/H1*	G2/H1*	G5/H1*	G5/H5
Multi-hole Torpedo Tip (X 27 TT)	✓	✓	✓	✓
One-hole Torpedo Tip (X 27 IT)	✓	✓	✓	✓
Open Tip (X 27 OT)	✓	×	✓	✓

*Larger gate diameters are available as standard

Refer to the System Selection Guide for the nozzle assembly order code incorporating Tips and Nuts

Nozzle Dimensions

TXBN27095 - TXBN2175

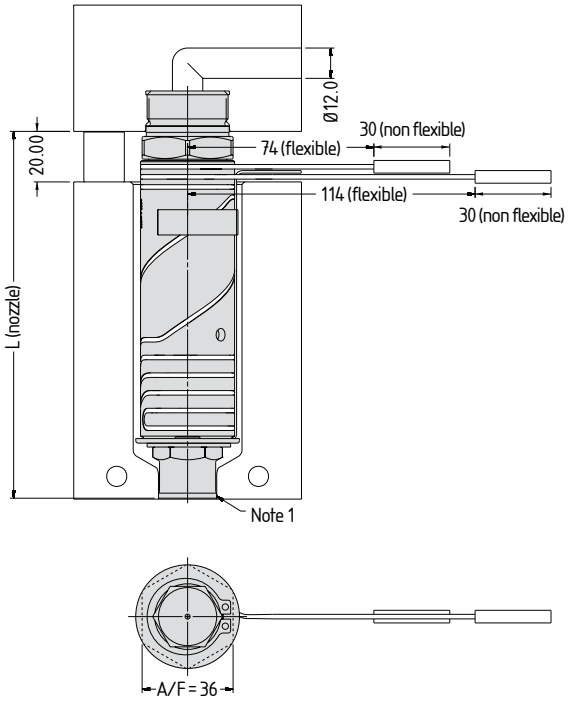

TXBN27225 - TXBN27275

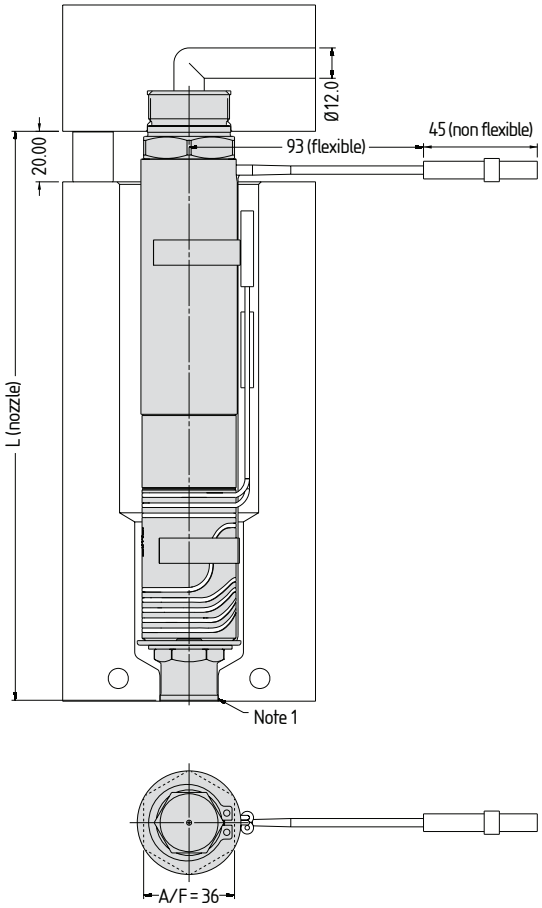

Note

1. Modify the contact area of the bush nut to suit the application.

→ Modify gate diameter and land to suit the part. → See Gate Modifications in Technical Specifications.

© Copyright Mastip Technology Limited. Information subject to alteration. V1.02 **www.mastip.com**

Multi-hole Torpedo Tip Nozzle Code	One-hole Torpedo Tip Nozzle Code	Open Tip Nozzle Code	L	PL	E@ΔT =200°C
TXTBN27095	TXIBN27095	TXOBN27095	95.2	75.2	0.22
TXTBN27115	TXIBN27115	TXOBN27115	115.2	95.2	0.28
TXTBN27130	TXIBN27130	TXOBN27130	130.2	110.2	0.32
TXTBN27145	TXIBN27145	TXOBN27145	145.2	125.2	0.36
TXTBN27175	TXIBN27175	TXOBN27175	175.2	155.2	0.44
TXTBN27225	TXIBN27225	TXOBN27225	225.2	205.2	0.57
TXTBN27275	TXIBN27275	TXOBN27275	275.2	255.2	0.70

Nozzle Fitment and Gate Dimensions

E = (PL + (20/2)) x 0.0000132 x (nozzle temp. °C - mould temp. °C)

TXBN27095 - TXBN2175

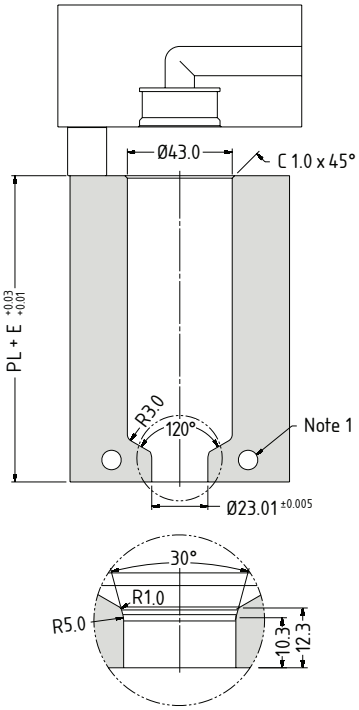

TXBN27225 - TXBN27275

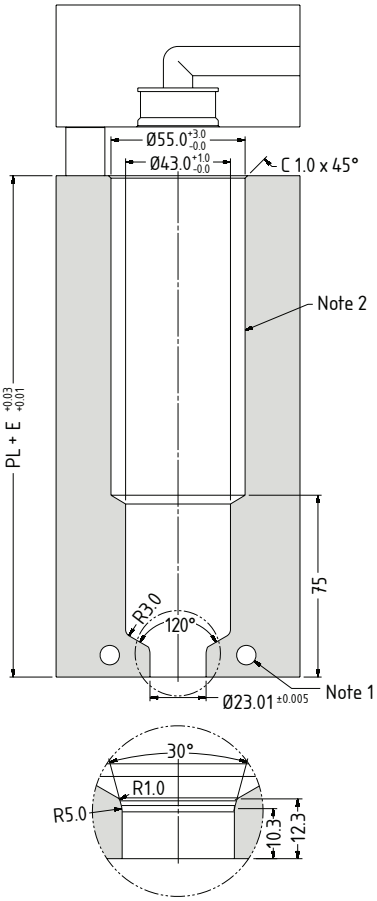

Note

1. Gate cooling is critical for correct operation and gate quality. → See Cooling section in Technical Specifications.
2. TX27225 - TX27275 uses two heaters. Larger pocket is to accomodate the front heater wiring.

© Copyright Mastip Technology Limited. Information subject to alteration. V1.02 **www.mastip.com**

Tip Grade Availability

	Tip and Nut Grade			
Tip (Code)	G1/H1*	G2/H1*	G5/H1*	G5/H5
Multi-hole Torpedo Tip (X 27 TT)	✓	✓	✓	✓
One-hole Torpedo Tip (X 27 IT)	✓	✓	✓	✓
Open Tip (X 27 OT)	✓	✕	✓	✓

*Larger gate diameters are available as standard

Refer to the System Selection Guide for the nozzle assembly order code incorporating Tips and Nuts

Nozzle Dimensions

TXSN27095 - TXSN2175

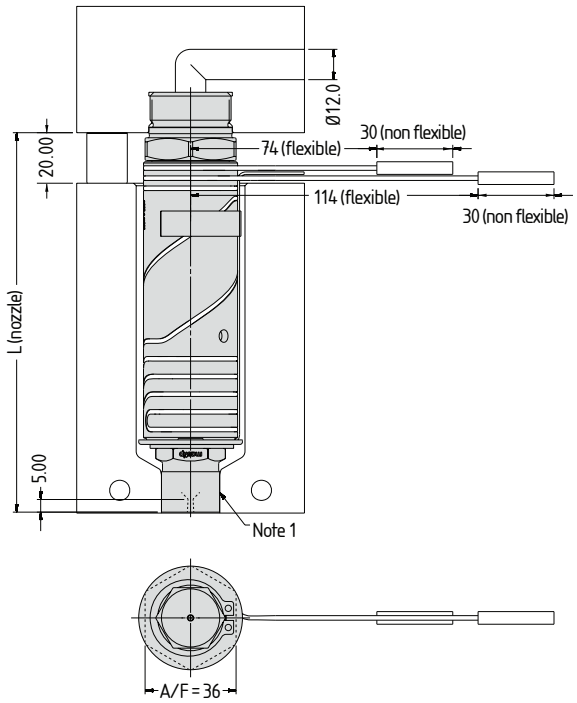

TXSN27225 - TXBN27275

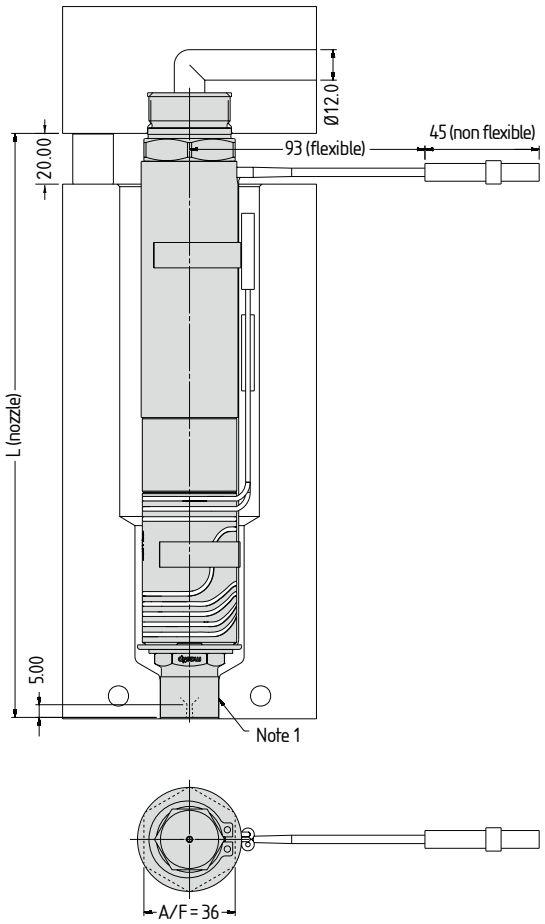

Note

1. Modify the contact area and the sprue nut to suit the application.

→ Modify gate diameter and land to suit the part. → See Gate Modifications in Technical Specifications.

© Copyright Mastip Technology Limited. Information subject to alteration. V1.02 **www.mastip.com**

Multi-hole Torpedo Tip Nozzle Code	One-hole Torpedo Tip Nozzle Code	Open Tip Nozzle Code	L	PL	E@ΔT =200°C
TXTSN27095	TXISN27095	TXOSN27095	100.2	80.2	0.24
TXTSN27115	TXISN27115	TXOSN27115	120.2	100.2	0.29
TXTSN27130	TXISN27130	TXOSN27130	135.2	115.2	0.33
TXTSN27145	TXISN27145	TXOSN27145	150.2	130.2	0.37
TXTSN27175	TXISN27175	TXOSN27175	180.2	160.2	0.45
TXTSN27225	TXISN27225	TXOSN27225	230.2	210.2	0.58
TXTSN27275	TXISN27275	TXOSN27275	280.2	260.2	0.71

Nozzle Fitment and Gate Dimensions

E = (PL + (20/2)) x 0.0000132 x (nozzle temp. °C - mould temp. °C)

TXSN27095 - TXSN2175

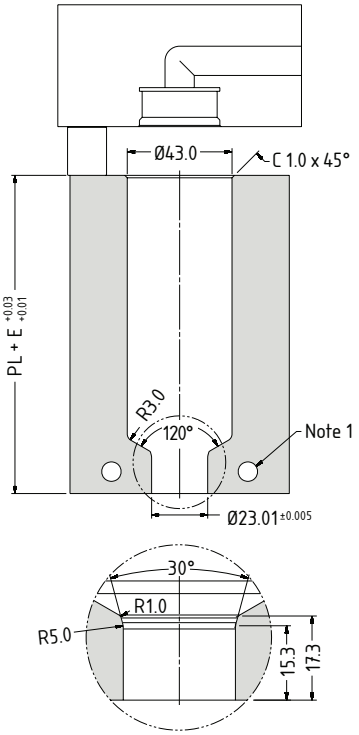

TXSN27225 - TXSN27275

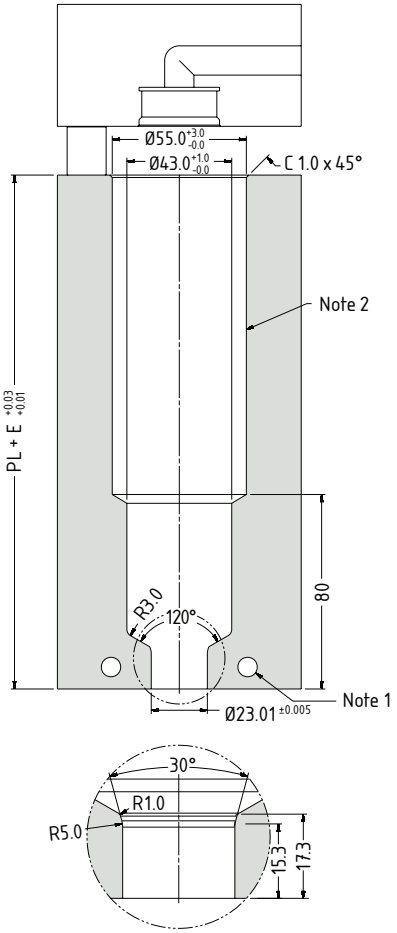

Note

1. Gate cooling is critical for correct operation and gate quality. → See Cooling section in Technical Specifications.
2. TX27225 - TX27275 uses two heaters. Larger pocket is to accomodate the front heater wiring.

© Copyright Mastip Technology Limited. Information subject to alteration. V1.02 **www.mastip.com**

Tip Grade Availability

	Tip Grade		
Tip (Code)	**G1**	**G2**	**G5**
Multi-hole Torpedo Tip (X 27 TT)	✓	✓	✓
One-hole Torpedo Tip (X 27 IT)	✓	✓	✓
Open Tip (X 27 OT)	✓	×	✓

Refer to the System Selection Guide for the nozzle assembly order code incorporating Tips and Nuts

Nozzle Dimensions

TXSL27095 - TXSL2175

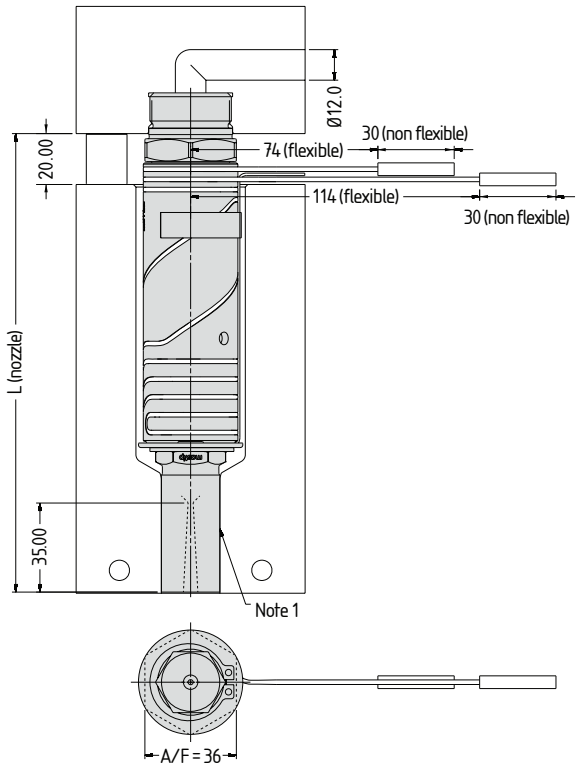

TXSL27225 - TXSL27275

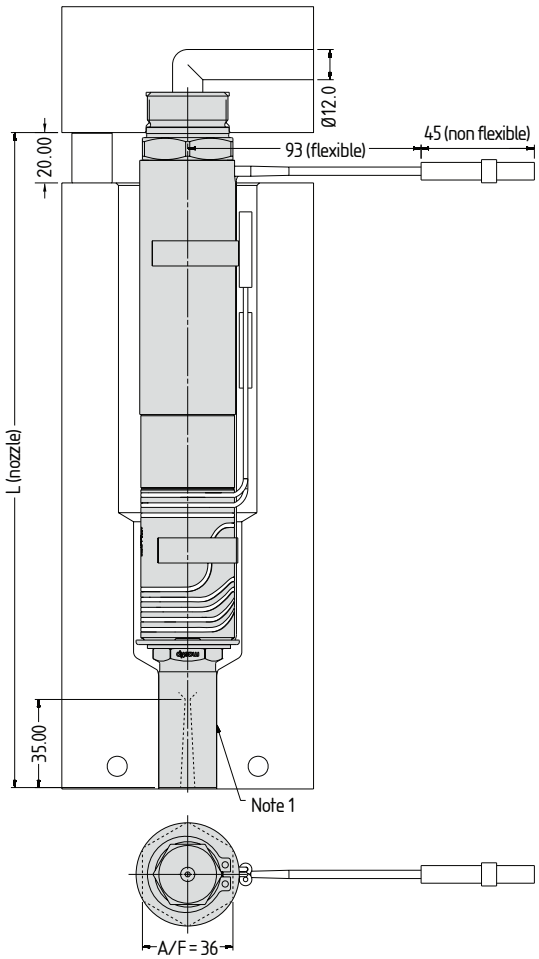

Note

1. Modify the contact area of the sprue nut to suit the application.

→ Modify gate diameter and land to suit the part. → See Gate Modifications in Technical Specifications.

© Copyright Mastip Technology Limited. Information subject to alteration. V1.02 **www.mastip.com**

Multi-hole Torpedo Tip Nozzle Code	One-hole Torpedo Tip Nozzle Code	Open Tip Nozzle Code	L	PL	E@ΔT =200°C
TXTSL27095	TXISL27095	TXOSL27095	130.2	110.2	0.32
TXTSL27115	TXISL27115	TXOSL27115	150.2	130.2	0.37
TXTSL27130	TXISL27130	TXOSL27130	165.2	145.2	0.41
TXTSL27145	TXISL27145	TXOSL27145	180.2	160.2	0.45
TXTSL27175	TXISL27175	TXOSL27175	210.2	190.2	0.53
TXTSL27225	TXISL27225	TXOSL27225	260.2	240.2	0.66
TXTSL27275	TXISL27275	TXOSL27275	310.2	290.2	0.79

Nozzle Fitment and Gate Dimensions

E = (PL + (20/2)) x 0.0000132 x (nozzle temp. °C - mould temp. °C)

TXSL27095 - TXSL2175

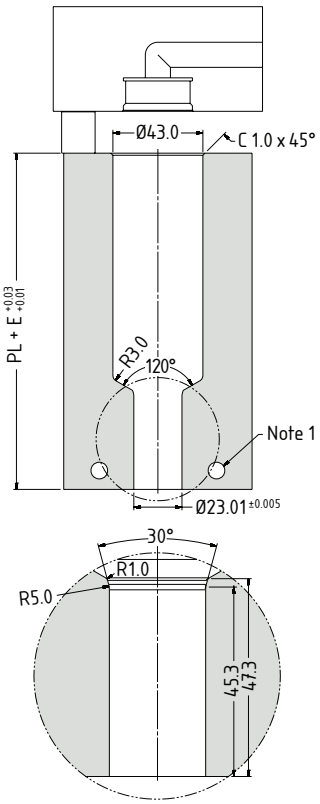

TXSL27225 - TXSL27275

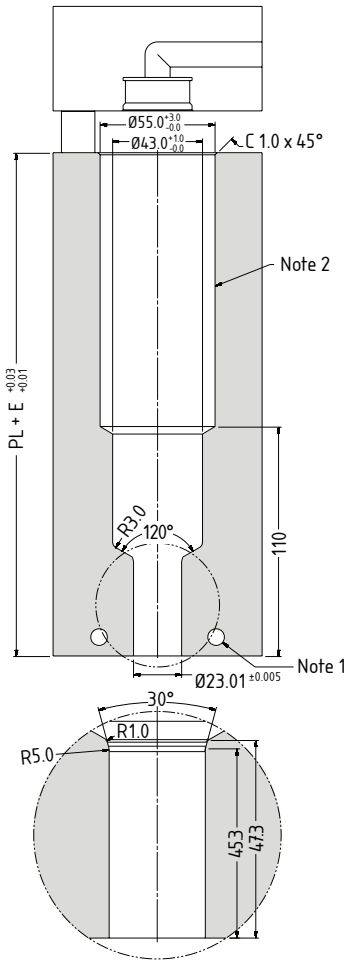

Note

1. Gate cooling is critical for correct operation and gate quality. → See Cooling section in Technical Specifications.
2. TX27225 - TX27275 uses two heaters. Larger pocket is to accomodate the front heater wiring.

© Copyright Mastip Technology Limited. Information subject to alteration. V1.02 **www.mastip.com**

Nozzle Dimensions

Style	A	B
P7	50	Contact Mastip
P4	53	
N3	60	

Refer to the System Selection Guide for the nozzle assembly order code incorporating Tips and Nuts

Nozzle Dimensions

TXYCN27095 - TXYCN2175

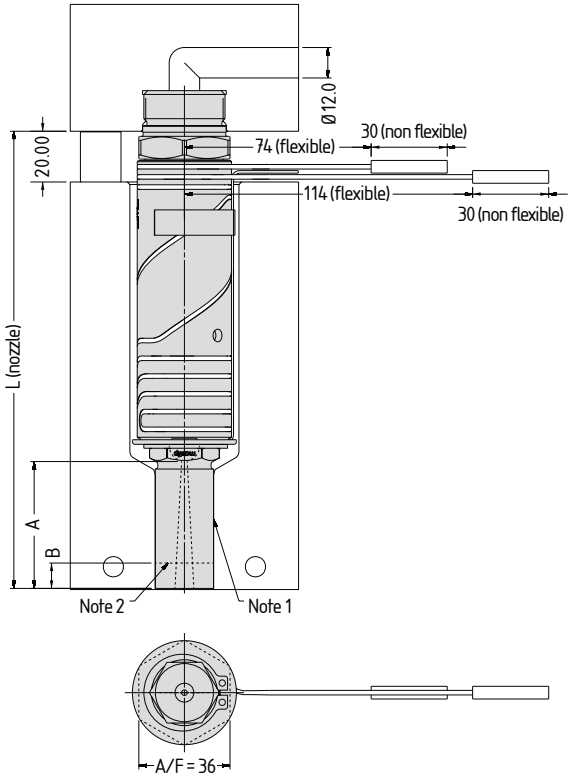

TXYCN27225 - TXYCN27275

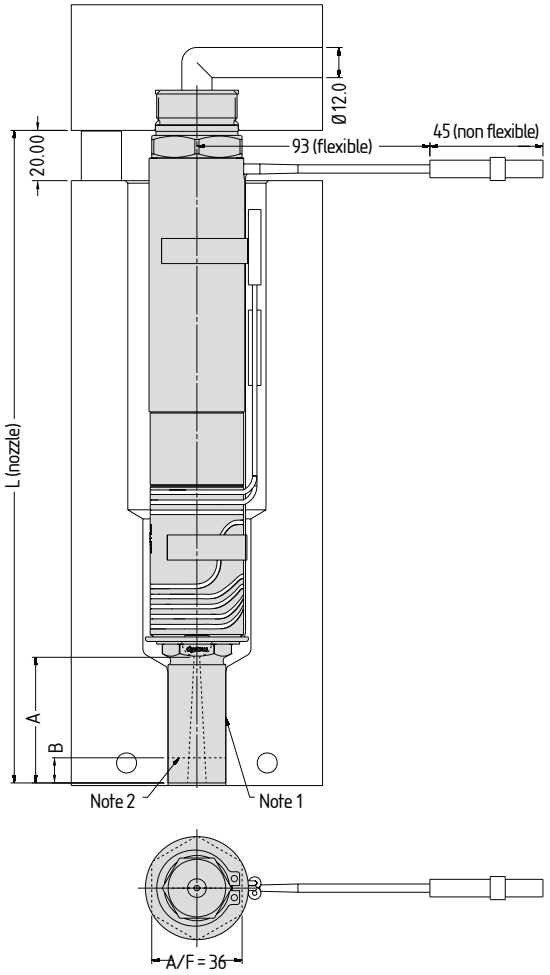

Note

1. Modify the contact of the YCN nut to suit the application.
2. Contact Mastip to reduce the length (B) of the YCN nut.

→ Modify gate diameter and land to suit the part. → See Gate Modifications in Technical Specifications.

© Copyright Mastip Technology Limited. Information subject to alteration. V1.02 **www.mastip.com**

P7 Gate Profile Nozzle Code	P4 Gate Profile Nozzle Code	N3 Gate Profile Nozzle Code	L	PL	E@ΔT =200°C
TXYCN27095	TXYCN27095	TXYCN27095	130.2	110.2	0.32
TXYCN27115	TXYCN27115	TXYCN27115	150.2	130.2	0.37
TXYCN27130	TXYCN27130	TXYCN27130	165.2	145.2	0.41
TXYCN27145	TXYCN27145	TXYCN27145	180.2	160.2	0.45
TXYCN27175	TXYCN27175	TXYCN27175	210.2	190.2	0.53
TXYCN27225	TXYCN27225	TXYCN27225	260.2	240.2	0.66
TXYCN27275	TXYCN27275	TXYCN27275	310.2	290.2	0.79

Nozzle Fitment and Gate Dimensions

E = (PL + (20/2)) x 0.0000132 x (nozzle temp. °C - mould temp. °C)

TXYCN27095 - TXYCN2175

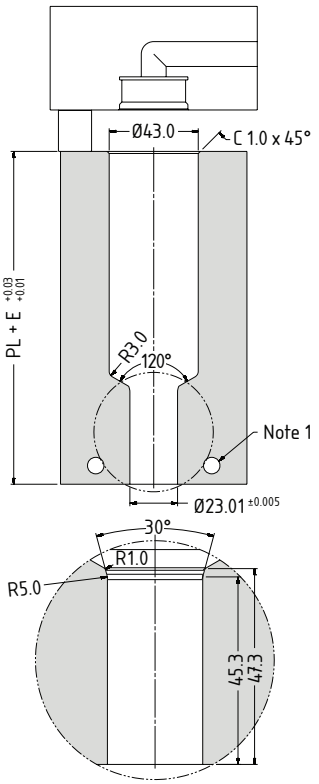

TXYCN27225 - TXYCN27275

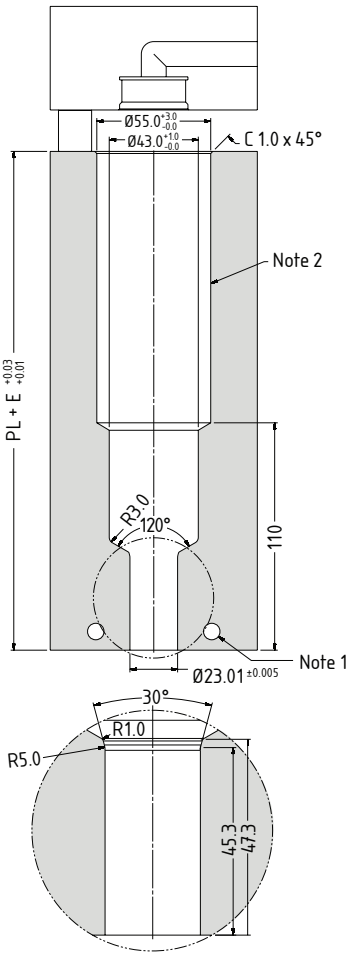

Note

1. Gate cooling is critical for correct operation and gate quality. → See Cooling section in Technical Specifications.
2. TX27225 - TX27275 uses two heaters. Larger pocket is to accomodate the front heater wiring.

© Copyright Mastip Technology Limited. Information subject to alteration. V1.02 **www.mastip.com**

Mastip Head Office New Zealand

Physical Address
558 Rosebank Road, Avondale
Auckland 1026, New Zealand

Postal Address
PO Box 90651, Victoria St West
Auckland 1142, New Zealand

Phone: +64 9 970 2100
Email: mastip@mastip.com

Mastip Regional Office Europe
Phone: +33 0 809 400 076
Email: europe@mastip.com

Mastip Regional Office North America
Phone: +1 262 644 9400
Email: northamerica@mastip.com

Mastip Regional Office China
Email: china@mastip.com

For a full list of Distributors,
please visit www.mastip.com

© Copyright Mastip Technology Limited. Information subject to alteration.